GENVIK
WE MAKE IT BETTER

MULTISTAGE PUMPS
KV & KH SERIES - 60HZ

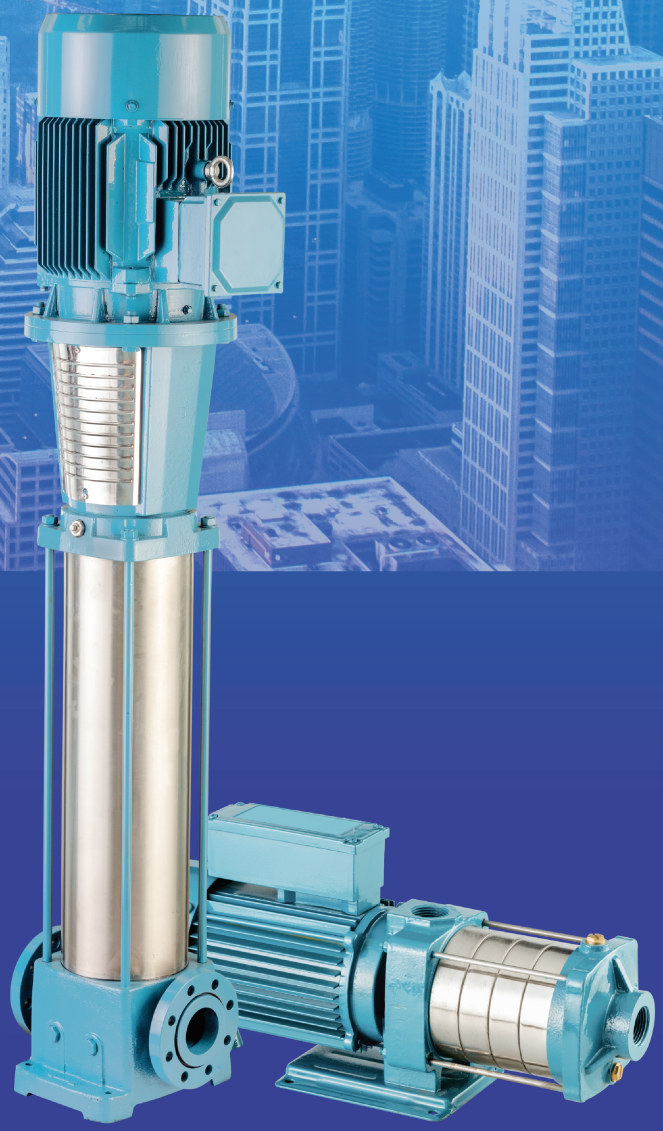

MARSHALLING THE POWER OF TECHNOLOGY TO PROVIDE COST EFFECTIVE PUMPING SOLUTIONS

Genvik is one of the emerging leaders in the world with the capability and the resources to provide pumping solutions that are not only cost effective but contributes to better productivity. As a technology oriented company Genvik has made major investments to stay on the cutting edge of pump manufacture. While the focus is on industrial pumps, Genvik has also developed pumping systems for diverse applications.

Genvik pumps are manufactured at ISO 9001&14001 facilities, equipped with state of art testing equipments and highly sophisticated machinery. Design and manufacture are carried out under digital environment for zero defect product turn out.

Backed by strong customer service and a willingness to listen to customer perceptions and needs, Genvik is a name to reckon with in the world of pumps.

VISION

To always stay on the cutting edge of pump and other accessories manufacture. with special emphasis on industrial pumps, to ensure that customers across the globe enjoy the benefits of our efforts to provide world class products.

MISSION

By embracing technology coupled with innovative thinking, we will meet customer expectations for high performance products with affordability as a key factor. We seek to do it by staying open to the latest developments in the field, by being proactive and optimistic and through teamwork, resourcefulness and commitment.

CONTENTS

VERTICAL MULTISTAGE CENTRIFUGAL PUMPS - KV SERIES

General Information	2
Technical Data & Operation Limits	3
Inlet Pressure & Electrical Data	4
MOC & Spares	5
Group Performance Curve & Conditions	6
Performance Data & Curve	7-18
Exploded Views	19-21
Dimensions Data & Drawings	22-33

HORIZONTAL MULTISTAGE CENTRIFUGAL PUMPS - KH SERIES

Description & MIC	34
Technical Data, MOC, Pumped Liquids, Operating Limits & Curve Conditions	35
Performance Curves & Tables	36-39
Exploded View	40
Dimensions & Weight	41-42

MODEL IDENTIFICATION

X X - X XXX / XX - X X X X X

This digit applicable when supplied with 1E2 & 1E3
(2 for 1E2 & 3 for 1E3

Voltage : This digit applicable except
230V 1Ph & 460 V 3Ph

No.of Trimmed Impller
(This digit is applicable only for Pumps
with trimmed impellers)
A=1 Trimmed impeller
B=2 Trimmed impeller

Phase / Connection / Frequency
1=Single phase PSC
2=Single phase CSCR
3=Three phase DOL
6 =Three phase SD

Type of Port Connection
R=with DIN standard Round Flange
L=with DIN standard Oval Flange
P=Suitable for PJE Flange

No. of Impellers
02,03,04,05,06,10,15,20

Flowrate in
GPM 9=009,10=010
100=100,200=200

Material of Construction
Pump Casing / impeller / Pump Bracket / Pump Base
C = AISI304 / AISI304 / Cast Iron / Cast Iron
S = AISI304 / AISI304 / AISI304 / AISI304
N = AISI316 / AISI316 / AISI316 / AISI316

V - Vertical Multistage
H - Horizontal Multistage

K - Genvik

TECHNICAL DATA

Power Range	:	0.5 to 60 HP
Speed	:	3450 rpm
Degree of protection	:	IP 55 (Optional IP44 / IP54)
Insulation class	:	'F' (Optional 'B')
Versions	:	Single Phase 230V, 60Hz, A.C. Supply (0.5 - 3HP) (Permanent Split Capacitor-PSC & CSCR) Incorporated with thermal over load protector. Three Phase 460V, 60Hz, A.C. Supply (0.5 - 60HP)
Sealing	:	Mechanical seal - Cartridge type
Direction of rotation	:	Anti-clockwise viewed from driving end
Type of Duty	:	S1 (continuous)
Flange type	:	Round (Optional - PJE)
Flange Standard		DIN (Optional - ANSI)
Pipe Connection	:	DN 25, DN 32, DN 40, DN 50, DN 65, DN 80 & DN 100

OPERATION LIMITS

Suction Lift Upto	:	21 Feet
Maximum Liquid Temperature	:	Standard : 14°F to 194°F Optional : 14°F to 248°F104°F
Maximum Ambient Temperature	:	104°F
Max. Operating Pressure Range	:	30 Bar

PERFORMANCE RANGE

Max. Flow Rate	:	530 gpm / 33.4 lps
Max. Head	:	980 ft / 300 mtr

INLET PRESSURE

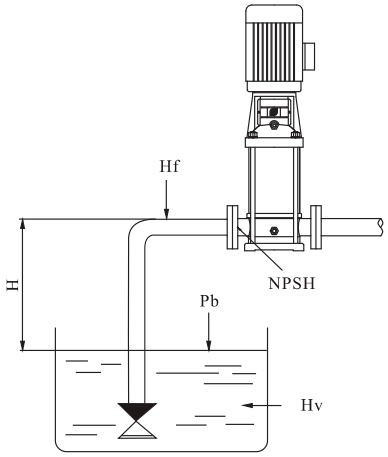

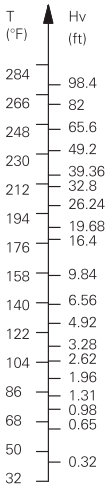

kW	HP	Volts (V)	Phase	Speed (rpm)	Current (A)	Eff (%)	Power Factor
0.55	0.75	220/380/440	3	3415	2.40/1.40/1.20	74.50	0.81
0.75	1	220/380/440	3	3460	3.10/1.80/1.50	79.10	0.81
1.1	1.5	220/380/440	3	3460	4.20/2.40/2.10	82.50	0.84
1.5	2	220/380/440	3	3480	5.70/3.30/2.80	84.00	0.85
2.2	3	220/380/440	3	3480	8.00/4.70/4.00	85.50	0.84
3.0	4.0	220/380/440	3	3500	11.30/6.60/5.60	86.60	0.82
3.7	5	220/380/440	3	3500	13.90/8.00/7.00	87.50	0.83
4.5	6.0	220/380/440	3	3505	15.50/9.00/7.80	87.90	0.87
5.5	7.5	220/380/440	3	3505	18.80/10.90/9.40	88.50	0.87
7.5	10	220/380/440	3	3530	25.00/14.50/12.50	89.50	0.88
9.3	12.5	220/380/440	3	3530	30.60/17.70/15.30	89.70	0.89
11	15	220/380/440	3	3530	36.40/21.10/18.20	90.20	0.88
15	20	220/380/440	3	3535	50.20/29.00/25.10	90.20	0.87
18.5	25	220/380/440	3	3540	61.30/35.50/30.70	91.00	0.87
22	30	220/380/440	3	3535	72.90/42.20/36.50	91.00	0.87
30	40	220/380/440	3	3550	99.80/57.80/49.90	91.70	0.86
37	50	220/380/440	3	3555	122.20/70.70/61.10	92.40	0.86
45	60	220/380/440	3	3555	146/84.50/73.0	93.00	0.87
55	75	220/380/440	3	3560	174.4/101/87.20	93.00	0.89
75	100	220/380/440	3	3560	239/138.3/119.50	93.60	0.88

ELECTRICAL DATA (3Ph, 460V, 60Hz)

Motor		Rated Current in Amps	Motor Eff. %	PF (cosø)
(kW)	(HP)			
0.37	0.5	0.8	80	0.75
0.55	0.75	1.2	82	0.71
0.75	1.0	1.6	82	0.71
1.1	1.5	2.0	84	0.77
1.5	2.0	2.6	85	0.83
2.2	3.0	3.9	84	0.83
3.0	4.0	4.1	86	0.77
4.0	5.5	7.0	85	0.80
5.5	7.5	9.2	87	0.89
7.5	10	13.5	88	0.81
11	15	16.6	91	0.89
15	20	24.0	87	0.92
18.5	25	28.0	90	0.92
22	30	34.0	91	0.87
30	40	45.0	91	0.91
37	50	57	93	0.88
45	60	69	93.6	0.90

Other voltages 380V, 220V and Dual Voltage 220/380V, 220/440V also can be supplied on request.

MAXIMUM INLET PRESSURE

The actual inlet pressure plus the Shutt off Pressure(Head) should always be lower than the "maximum operating pressure".

MINIMUM INLET PRESSURE

In case that the pressure in pump is lower that steam pressure used to convey liquid, the cavitations will occur. To avoid the cavitations, and lessen the vibration and noise, you are suggested to adopt NPSH to make sure that the pump are under optimal operation condition.

The following formula can be used for calculation of minimum inlet pressure :

H = Pb - NPSHR - Hf - Hv - Hs
H : Maximum suction head (ft)
Pb : Atmosphere pressure
IS : 33.9 ft at sea leval
NPSH : Net positive suction head (ft)
It can be read from the point of Max.flow rate shown on NPSHR curve.
Hf : Pipeline loss at the inlet (ft)
It is in accordance with pipeline possible Max.flow.
Hv : Stream pressure (ft)
It depends on liquid temperature and system pressure value.
Hs : Safety margin (ft)
Minimum 1.64 ft delivery head

If the calculated result H is positive, the pump may run under the Max. suction head H. In case the calculated result H is negative, a delivery head if Min.inlet pressure is necessary.

Note: Normally, the above calculation will not be done. H is calculated in the following conditions:

1. The liquid temperature is comparatively higher.
2. Liquid flow exceeds rated value.
3. Suction head is comparatively large or inlet pipeline long.
4. System pressure is too low.
5. Bad inlet condition.

GENVIK
WE MAKE IT BETTER

MATERIALS OF CONSTRUCTION

Part Name	Part No.	Type - C	Type - S	Type - N
Pump Outer Shell	29.06	AISI 304	AISI 304	AISI 316
Pump Head	30.00	C.I.	Upto 80gpm - C.I	Upto 80gpm - C.I.
			Above 160gpm - AISI 304	Above 160gpm - AISI 316
Pump Head Cover	30.07	NA	AISI 304*	AISI 316*
Pump Head Stool (Only for 160gpm & above)	30.01	C.I.	C.I.	C.I.
Pump Base	29.01	C.I.	AISI 304	AISI 316
Base Plate	24.03	NA	C.I.	C.I.
Impeller	19.00	AISI 304	AISI 304	AISI 316
** Mechanical Seal	16.00	SiC / SiC / FKM (Standard)	SiC / SiC / FKM (Standard)	SiC / SiC / FKM (Standard)
*** Bush	12.03	SiC / SiC	SiC / SiC	SiC / SiC
Diffuser (Chamber)	18.07	AISI 304	AISI 304	AISI 316
Pump Shaft	22.00	AISI 304 / 431	AISI 304 / 431	AISI 316/329
Wearing Ring	17.01	Teflon	Teflon	Teflon
Flange	29.04	C.I.	AISI 304	AISI 316
Neck Ring	19.01	AISI 304	AISI 304	AISI 316
"O" Ring	32.09	EPDM / FKM	EPDM / FKM	EPDM / FKM
Coupling	22.01	M.S / C.I.	M.S / C.I.	M.S / C.I.
Split Cone	19.02	AISI 304	AISI 304	AISI 316
Split Cone Nut	19.03	AISI 304	AISI 304	AISI 316

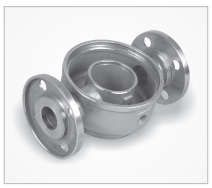

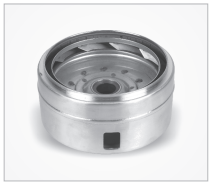

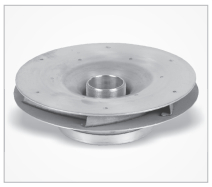

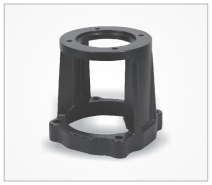

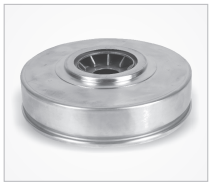

* Provided only upto 80gpm

** Optional Mechanical Seal MOCs

TC / TC / FKM (Only up to 194°F)

SiC / SiC / EPDM

TC / CARBON / EPDM

TC / TC / EPDM

*** Optional Bush MOC

TC / TC

SiC - Silicon Carbide, TC - Tungsten Carbide, FKM - Fluoroelastomer (VITON), EPDM - Ethylene Propylene Diene Monomer

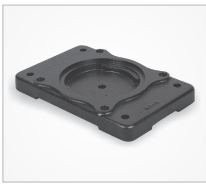

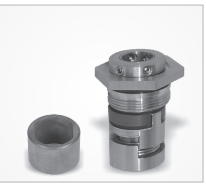

GROUP PERFORMANCE CURVE

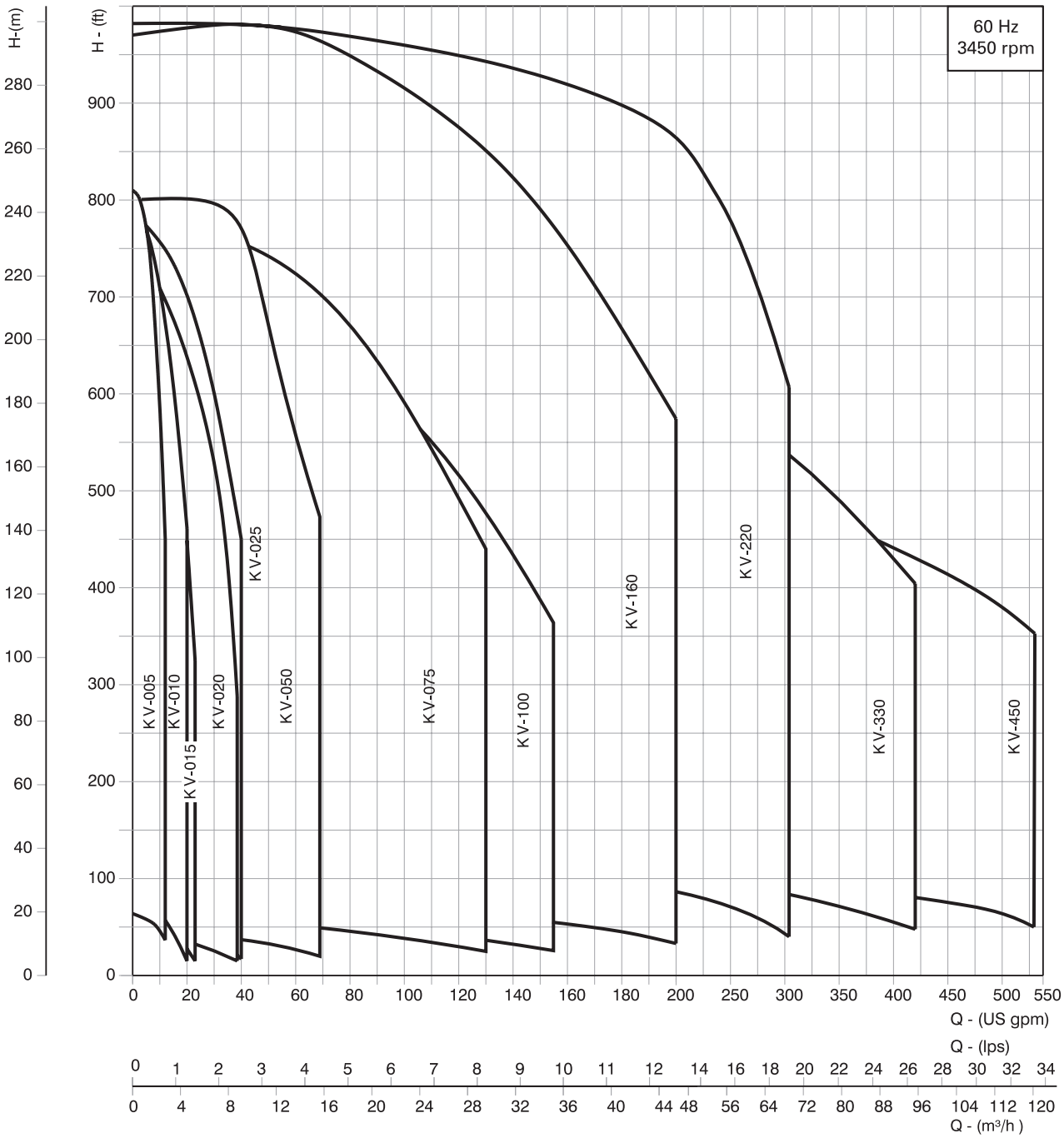

CURVE CONDITIONS

| Curve tolerance are according to ISO 9906, Grade 3B | The performance are taken at rated voltage & speed that are only indicative | Actual discharge depends on availability of water in well / tank, height of water column from the suction pipe end | The measurements were made with airless water at 68°F when pumping liquids with a density higher than of water, motors with correspondingly higher outputs must be used | The bold curves indicate the recommended performance range | Pipe friction losses have not been included in the performance curves & performance tables | The performance curves are applicable for all type of materials of construction.

GENVIK
WE MAKE IT BETTER

Performance Data & Curve

Nominal Flow	5 gpm
Model	KV 005
Pipe Size	DN 25 / 32

PUMP MODEL	MOTOR POWER		DISCHARGE							
			m³/h	0	0.9	1.1	1.4	1.8	2.3	2.7
	kW	HP	US gpm	0	4	5	6	8	10	12
KV-S005/02-R3	0.37	0.5	TOTAL MANOMETRIC HEAD IN FEET	62	59	58	58	53	46	38
KV-S005/03-R3	0.37	0.5		93	86	84	82	78	66	50
KV-S005/04-R3	0.37	0.5		122	116	114	110	100	83	66
KV-S005/05-R3	0.55	0.75		150	141	140	139	126	109	82
KV-S005/06-R3	0.55	0.75		180	170	168	162	147	123	95
KV-S005/07-R3	0.75	1.0		210	205	200	194	176	150	119
KV-S005/08-R3	0.75	1.0		240	230	224	219	200	169	132
KV-S005/09-R3	0.75	1.0		270	260	252	246	228	195	145
KV-S005/10-R3	1.1	1.50		300	290	283	274	251	219	170
KV-S005/11-R3	1.1	1.50		330	315	309	300	275	235	180
KV-S005/12-R3	1.1	1.50		360	340	335	326	294	250	191
KV-S005/13-R3	1.1	1.50		390	370	361	350	320	271	209
KV-S005/15-R3	1.5	2.0		450	432	472	412	379	328	255
KV-S005/17-R3	1.5	2.0		510	486	478	465	430	361	280
KV-S005/19-R3	2.2	3.0		570	549	540	526	484	411	320
KV-S005/21-R3	2.2	3.0		625	604	595	580	534	455	350
KV-S005/23-R3	2.2	3.0		680	660	650	633	581	493	380
KV-S005/25-R3	2.2	3.0		740	716	704	688	629	530	408
KV-S005/27-R3	3.0	4.0		810	788	771	751	682	586	450

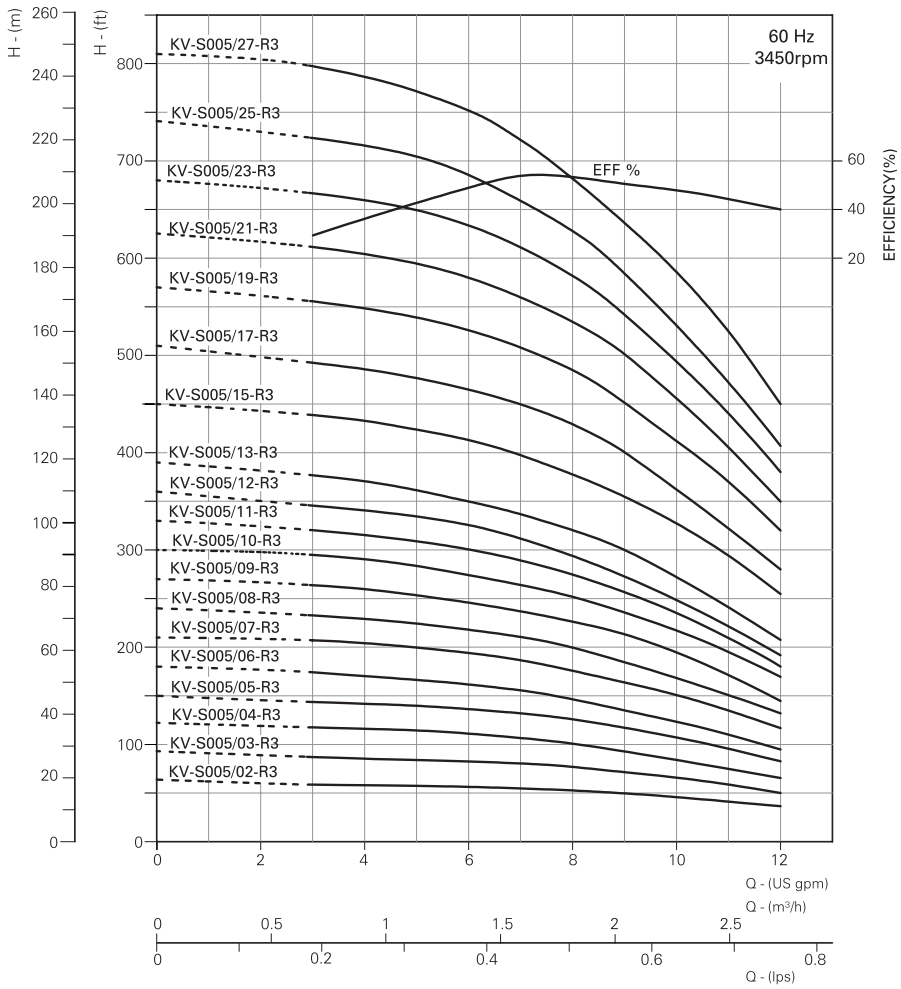

Replace the 3rd digit in model name as "C" for Cast Iron pump base & pump head models and "N" for AISI 316 construction.
The given performance is same for Type - C, S, N
Replace 'R' with 'L' and 'P' for Oval flange and PJE flange respectively.
The final digit of Model Identification '3' denotes 3 phase. Replace with '1' and '6' for 1 phase motor and 3 phase SD motor respectively.
In view of the continuous developments the Information / Descriptions / Specifications / Illustrations are subject to change without notice.

Performance Data & Curve

Nominal Flow	10 gpm
Model	KV 010
Pipe Size	DN 25 / 32

PUMP MODEL	MOTOR POWER		DISCHARGE							
			m³/h	0	0.9	1.8	2.3	2.7	3.6	4.5
	kW	HP	US gpm	0	4	8	10	12	16	20
KV-S010/02-R3	0.37	0.5	TOTAL MANOMETRIC HEAD IN FEET	89	80	72	65	57	38	13
KV-S010/03-R3	0.55	0.75		132	123	111	102	95	75	40
KV-S010/04-R3	0.75	1.0		174	165	153	144	135	110	62
KV-S010/05-R3	1.1	1.5		227	215	201	192	184	153	105
KV-S010/06-R3	1.1	1.5		270	257	243	231	218	177	125
KV-S010/07-R3	1.5	2.0		306	301	285	270	254	210	151
KV-S010/08-R3	2.2	3.0		348	345	327	313	296	249	178
KV-S010/09-R3	2.2	3.0		414	397	375	360	338	290	220
KV-S010/10-R3	2.2	3.0		457	440	418	400	380	333	260
KV-S010/11-R3	2.2	3.0		505	487	466	450	432	382	308
KV-S010/12-R3	2.2	3.0		547	530	508	491	470	411	331
KV-S010/13-R3	3	4.0		590	573	551	533	508	441	357
KV-S010/15-R3	3	4.0		670	650	610	580	550	472	380
KV-S010/18-R3	4	5.5		798	778	739	710	672	583	461

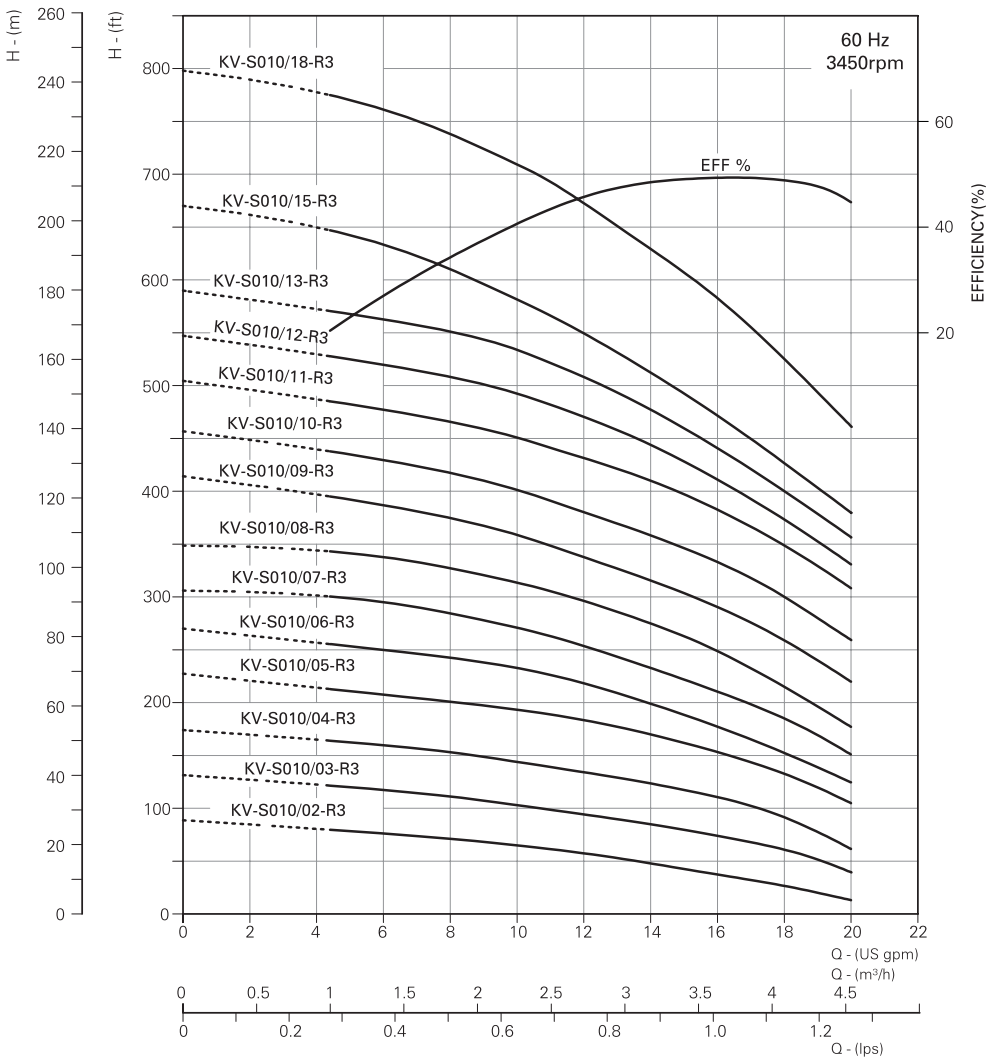

Replace the 3rd digit in model name as "C" for Cast Iron pump base & pump head models and "N" for AISI 316 construction.
The given performance is same for Type - C, S, N
Replace 'R' with 'L' and 'P' for Oval flange and PJE flange respectively.
The final digit of Model Identification '3' denotes 3 phase. Replace with '1' and '6' for 1 phase motor and 3 phase SD motor respectively.
In view of the continuous developments the Information / Descriptions / Specifications / Illustrations are subject to change without notice.

GENVIK
WE MAKE IT BETTER

Performance Data & Curve

Nominal Flow	15 gpm
Model	KV 015
Pipe Size	DN 25 / 32

PUMP MODEL	MOTOR POWER		DISCHARGE						
			m³/h	0	1.4	2.3	3.4	4.1	5.2
	kW	HP	US gpm	0	6	10	15	18	23
KV-S015/02-R3	0.37	0.50	TOTAL MANOMETRIC HEAD IN FEET	62	60	55	47	35	15
KV-S015/03-R3	0.55	0.75		98	92	85	72	60	30
KV-S015/04-R3	0.55	0.75		125	118	111	91	75	35
KV-S015/05-R3	0.75	1.0		151	150	140	122	110	65
KV-S015/06-R3	1.1	1.5		188	182	170	145	125	79
KV-S015/07-R3	1.1	1.5		212	210	198	170	145	89
KV-S015/08-R3	1.1	1.5		250	238	220	190	160	100
KV-S015/09-R3	1.5	2.0		278	262	250	219	180	112
KV-S015/10-R3	1.5	2.0		320	308	290	242	205	130
KV-S015/11-R3	1.5	2.0		345	330	308	265	226	145
KV-S015/12-R3	2.2	3.0		378	362	340	295	250	165
KV-S015/13-R3	2.2	3.0		416	395	372	321	275	180
KV-S015/15-R3	2.2	3.0		490	460	426	368	308	190
KV-S015/17-R3	2.2	3.0		528	505	470	410	350	223
KV-S015/19-R3	3.0	4.0		608	572	535	460	390	255
KV-S015/21-R3	3.0	4.0		670	640	605	522	450	270
KV-S015/23-R3	3.0	4.0		718	685	645	551	475	310
KV-S015/25-R3	3.0	4.0		780	750	710	608	520	325

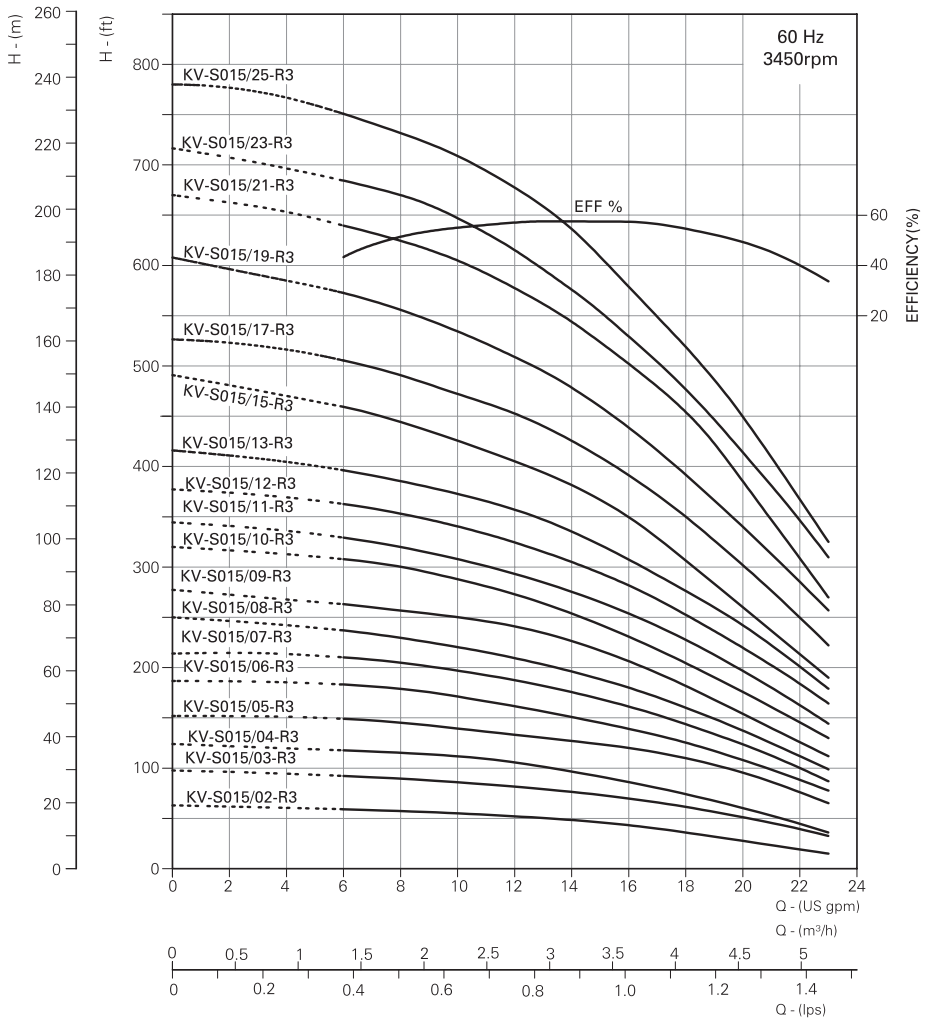

Replace the 3rd digit in model name as "C" for Cast Iron pump base & pump head models and "N" for AISI 316 construction.
The given performance is same for Type - C, S, N
Replace 'R' with 'L' and 'P' for Oval flange and PJE flange respectively.
The final digit of Model Identification '3' denotes 3 phase. Replace with '1' and '6' for 1 phase motor and 3 phase SD motor respectively.
In view of the continuous developments the Information / Descriptions / Specifications / Illustrations are subject to change without notice.

Performance Data & Curve

Nominal Flow	20 gpm
Model	KV 020
Pipe Size	DN 25 / 32

PUMP MODEL	MOTOR POWER		DISCHARGE							
			m³/h	0	2.5	3.4	4.5	5.7	8	8.6
	kW	HP	US gpm	0	11	15	20	25	35	38
KV-S020/01-R3	0.37	0.5	TOTAL MANOMETRIC HEAD IN FEET	47	40	39	36	32	20	16
KV-S020/02-R3	0.75	1.0		94	84	80	71	65	41	26
KV-S020/03-R3	0.75	1.0		144	132	127	119	107.5	70	42
KV-S020/04-R3	1.5	2.0		190	178	168	158	144	100	75
KVS020/05-R3	2.2	3.0		245	230	223	202	202	137	99
KV-S020/06-R3	2.2	3.0		290	276	268.5	260	247	163	113
KV-S020/07-R3	3	4.0		337	320	314	301	282	182	128
KV-S020/08-R3	3	4.0		395	372	360	341	322	210	143
KV-S020/10-R3	4	5.5		488	465	452	432	405	259	180
KV-S020/12-R3	4	5.5		579	555	541	520	484	333	243
KV-S020/14-R3	5.5	7.5		671	640	620	589	539	362	272
KV-S020/16-R3	5.5	7.5		763	705	680	640	592	425	310

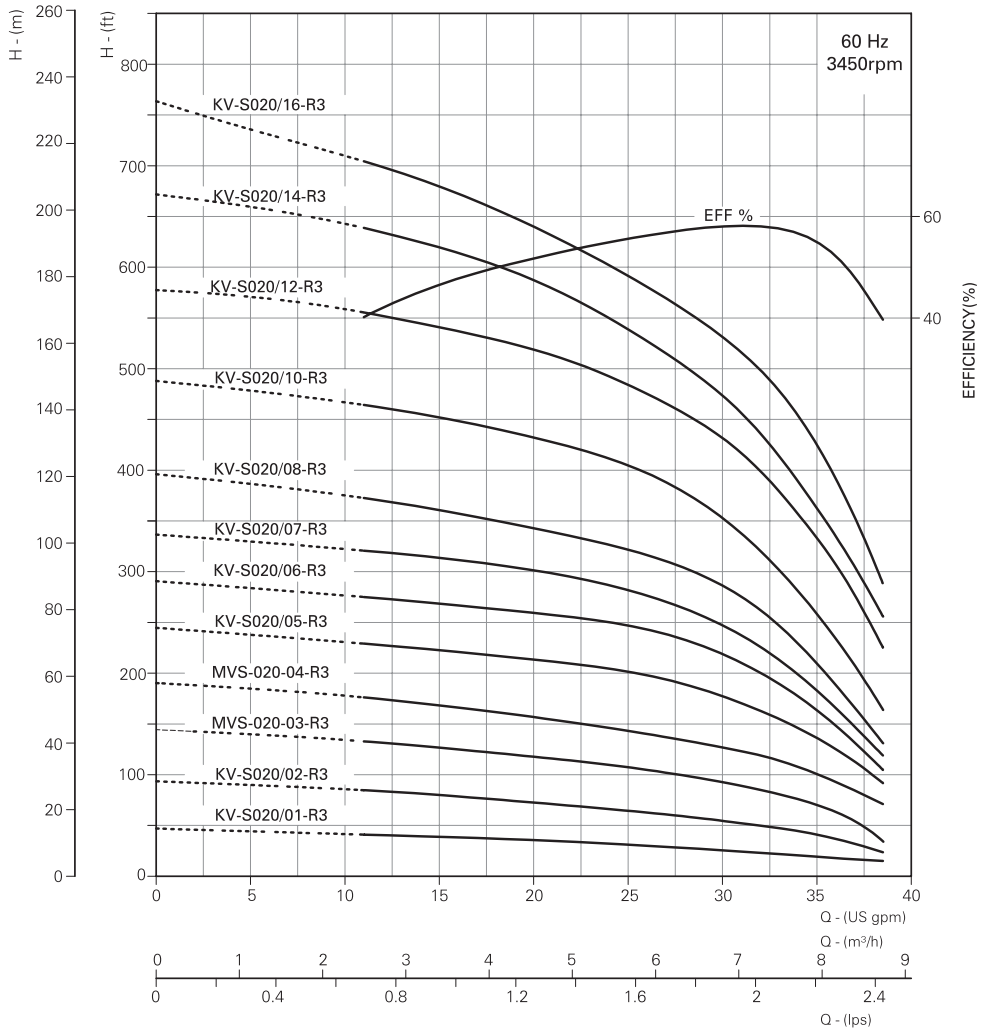

Replace the 3rd digit in model name as "C" for Cast Iron pump base & pump head models and "N" for AISI 316 construction.
The given performance is same for Type - C, S, N
Replace 'R' with 'L' and 'P' for Oval flange and PJE flange respectively.
The final digit of Model Identification '3' denotes 3 phase. Replace with '1' and '6' for 1 phase motor and 3 phase SD motor respectively.
In view of the continuous developments the Information / Descriptions / Specifications / Illustrations are subject to change without notice.

GENVIK
WE MAKE IT BETTER

Performance Data & Curve

Nominal Flow	25 gpm
Model	KV 025
Pipe Size	DN 25 / 32

PUMP MODEL	MOTOR POWER		DISCHARGE							
			m³/h	0	2.8	4.6	5.7	6.8	8	9.1
	kW	HP	US gpm	0	12.5	20	25	30	35	40
KV-S025/02-R3	0.55	0.75	TOTAL MANOMETRIC HEAD IN FEET	62	60	54	48	41	30	18
KV-S025/03-R3	1.1	1.5		92	89	80	73	64	51	38
KV-S025/04-R3	1.1	1.5		125	114	104	95	82	70	50
KV-S025/05-R3	1.5	2.0		159	156	140	129	116	100	80
KS-S025/06-R3	2.2	3.0		200	193	174	162	150	129	109
KV-S025/07-R3	2.2	3.0		220	216	200	185	166	142	118
KV-S025/08-R3	2.2	3.0		255	240	220	208	190	166	135
KV-S025/09-R3	2.2	3.0		288	277	256	239	211	182	150
KV-S025/10-R3	3.0	4.0		330	315	292	273	248	217	182
KV-S025/11-R3	3.0	4.0		358	340	319	296	269	234	195
KV-S025/12-R3	3.0	4.0		390	370	347	322	292	254	210
KV-S025/13-R3	4.0	5.5		424	407	379	353	322	280	235
KV-S025/14-R3	4.0	5.5		455	440	410	380	345	302	253
KV-S025/15-R3	4.0	5.5		490	468	435	408	372	329	275
KV-S025/16-R3	4.0	5.5		525	502	470	439	398	350	300
KV-S025/18-R3	5.5	7.5		590	567	530	495	453	400	339
KV-S025/20-R3	5.5	7.5		653	632	587	549	501	445	370
KV-S025/22-R3	5.5	7.5		720	690	642	600	550	482	400
KV-S025/24-R3	7.5	10		785	748	701	658	600	530	450

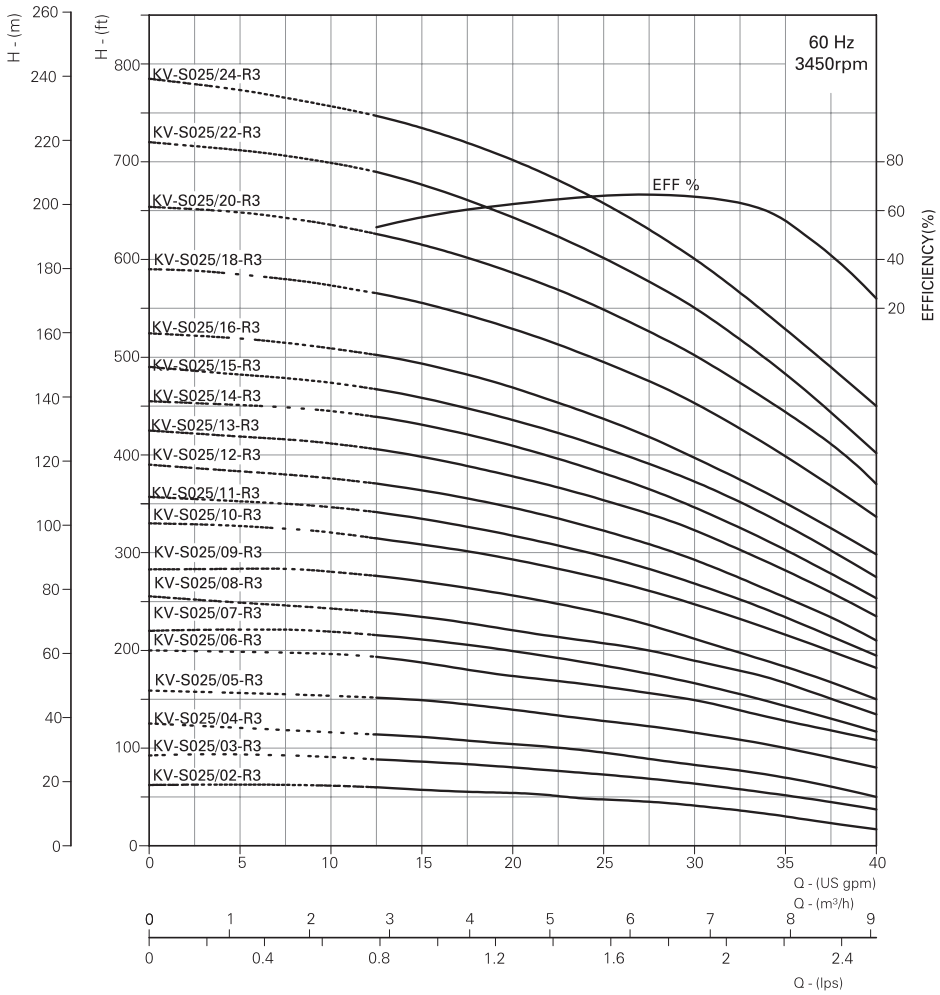

Replace the 3rd digit in model name as "C" for Cast Iron pump base & pump head models and "N" for AISI 316 construction.
The given performance is same for Type - C, S, N
Replace 'R' with 'L' and 'P' for Oval flange and PJE flange respectively.
The final digit of Model Identification '3' denotes 3 phase. Replace with '1' and '6' for 1 phase motor and 3 phase SD motor respectively.
In view of the continuous developments the Information / Descriptions / Specifications / Illustrations are subject to change without notice.

Performance Data & Curve

Nominal Flow	50 gpm
Model	KV 050
Pipe Size	DN 40

PUMP MODEL	MOTOR POWER		DISCHARGE								
			m³/h	0	2.3	4.5	6.8	9.1	11.4	13.6	15.7
	kW	HP	US gpm	0	10	20	30	40	50	60	69
KV-S050/01-R3	0.55	0.75	TOTAL MANOMETRIC HEAD IN FEET	45	45	44.5	43	39.5	34	26.7	18.5
KV-S050/02-R3	1.1	1.5		92.5	92.5	92	90	84	74	60.5	46.5
KV-S050/03-R3	2.2	3.0		140	140	139.5	139	130	116.5	98	71.5
KV-S050/04-R3	2.2	3.0		187	187	186.5	183	172	152	128	101.5
KV-S050/05-R3	4.0	5.5		235	235	234.5	231	217.5	194	163	131
KV-S050/06-R3	4.0	5.5		280	280	279.5	276.5	258.5	231	194	155
KV-S050/07-R3	5.5	7.5		327	327	326.5	319	299.5	267	223	178
KV-S050/08-R3	5.5	7.5		373.5	373	372	369.5	348	311	262	210
KV-S050/09-R3	5.5	7.5		421	421	420	413	388	346.5	293	233.7
KV-S050/10-R3	5.5	7.5		466.5	466.5	466	457	429	387	321	257.5
KV-S050/12-R3	7.5	10		559	559	558	544	510	455	383	306
KV-S050/14-R3	11	15		650	546	645	628	588	523	436	348
KV-S050/16-R3	11	15		747	747	746	731	687	614	516	418
KV-S050/17-R3	11	15		792.5	793.5	793	775	725.5	650	546.5	440.5

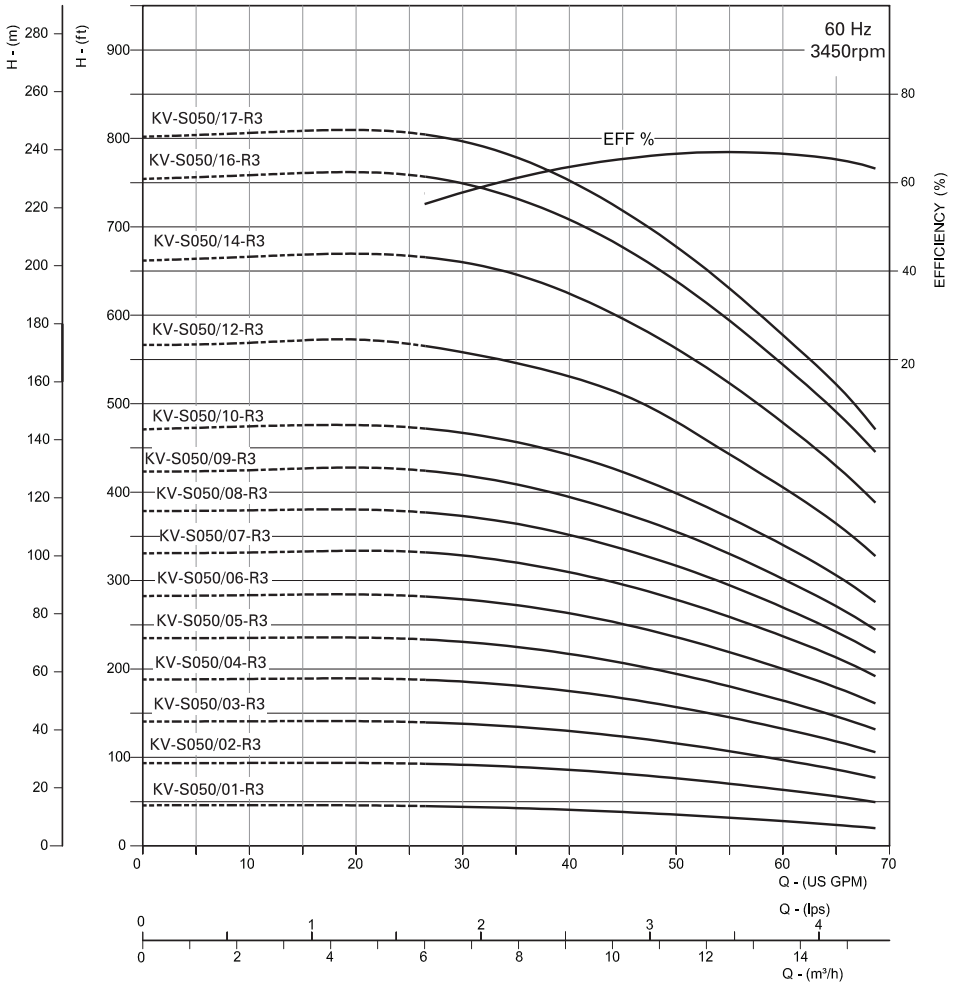

Replace the 3rd digit in model name as "C" for Cast Iron pump base & pump head models and "N" for AISI 316 construction.
The given performance is same for Type - C, S, N
Replace 'R' with 'L' and 'P' for Oval flange and PJE flange respectively.
The final digit of Model Identification '3' denotes 3 phase. Replace with '1' and '6' for 1 phase motor and 3 phase SD motor respectively.
In view of the continuous developments the Information / Descriptions / Specifications / Illustrations are subject to change without notice.

GENVIK
WE MAKE IT BETTER

Performance Data & Curve

Nominal Flow	75 gpm
Model	KV 075
Pipe Size	DN 50

PUMP MODEL	MOTOR POWER		DISCHARGE								
			m³/h	0	4.5	9.1	13.6	18.2	22.7	27.3	28.4
	kW	HP	US gpm	0	20	40	60	80	100	120	125
KV-S075/01-R3	1.5	2.0	TOTAL MANOMETRIC HEAD IN FEET	62	60	58	54	48.5	40	30	27
KV-S075/02-R3	4	5.5		131	127	123	117	107	93	74	68
KV-S075/03-R3	5.5	7.5		194	188	183	173.5	158.5	136.5	106.5	100
KV-S075/04-R3	5.5	7.5		258	252	245	234	213	184	145.5	136
KV-S075/05-R3	7.5	10		321	320	304.5	289	264	226	180	168
KV-S075/06-R3	11	15		382	373	363	343	313	268	211	197
KV-S075/07-R3	11	15		449	440	429	408	373	321.5	257.5	238.5
KV-S075/08-R3	11	15		511	500.5	488	464	423	364	290	268
KV-S075/09-R3	15	20		572	560.5	545	517	471	405.5	319.5	296
KV-S075/10-R3	15	20		645	635	624	596.5	548.5	476	383	360
KV-S075/12-R3	18.5	25		776	766	753	722.5	664.5	579	470.5	441

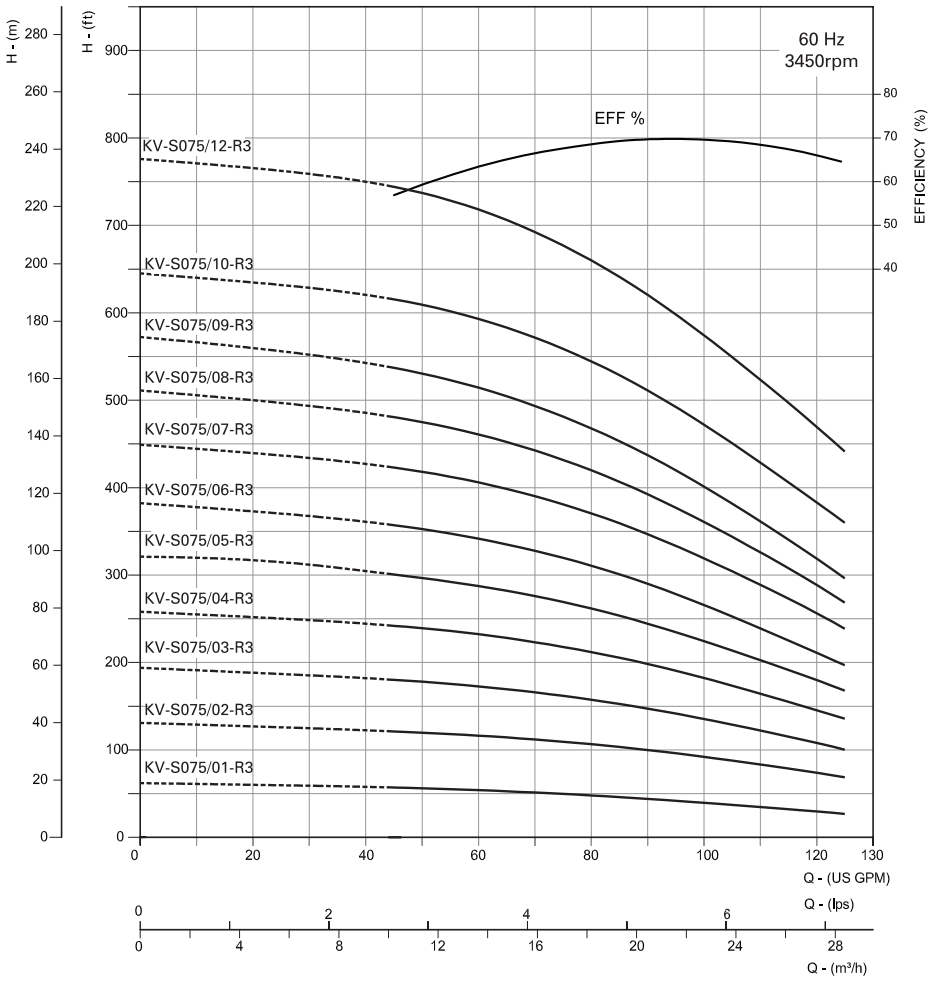

Replace the 3rd digit in model name as "C" for Cast Iron pump base & pump head models and "N" for AISI 316 construction.
The given performance is same for Type - C, S, N
Replace 'R' with 'L' and 'P' for Oval flange and PJE flange respectively.
The final digit of Model Identification '3' denotes 3 phase. Replace with '1' and '6' for 1 phase motor and 3 phase SD motor respectively.
In view of the continuous developments the Information / Descriptions / Specifications / Illustrations are subject to change without notice.

Performance Data & Curve

Nominal Flow	100 gpm
Model	KV 100
Pipe Size	DN 50

PUMP MODEL	MOTOR POWER		DISCHARGE									
			m³/h	0	4.5	9.1	13.6	18.2	22.7	27.3	31.8	35.0
	kW	HP	US gpm	0	20	40	60	80	100	120	140	154
KV-S100/01-R3	2.2	3.0	TOTAL MANOMETRIC HEAD IN FEET	65	65	63	60.5	57	52	44.5	34.5	26
KV-S100/02-R3	4.0	5.5		132.5	132	129	124.5	118	108	94	75	60
KV-S100/03-R3	5.5	7.5		200	198	195	189	180	165	144.5	116.5	94
KV-S100/04-R3	7.5	10		266	263	258.5	251	237.5	218.5	191.5	155	124.5
KV-S100/05-R3	11	15		336	332	327	318	302	278	243.5	199	162
KV-S100/06-R3	11	15		400.5	396	390	379	360	331	290	236	192
KV-S100/07-R3	15	20		473.5	468.5	464.5	454	434.5	401.5	356.5	296	243
KV-S100/08-R3	15	20		540.5	535.5	530	517	495	457	406	334.5	275
KV-S100/10-R3	18.5	25		679	672	664.5	652	624.5	578	513	427	357

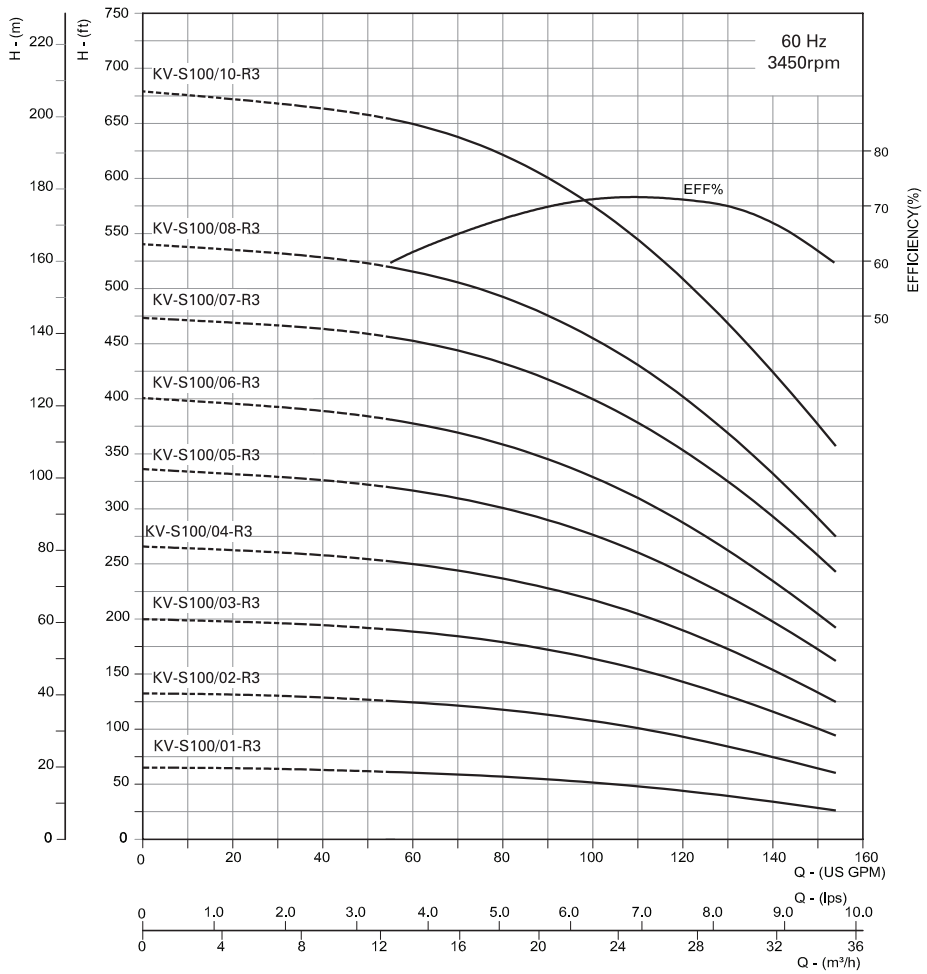

Replace the 3rd digit in model name as "C" for Cast Iron pump base & pump head models and "N" for AISI 316 construction.
The given performance is same for Type - C, S, N
Replace 'R' with 'L' and 'P' for Oval flange and PJE flange respectively.
The final digit of Model Identification '3' denotes 3 phase. Replace with '1' and '6' for 1 phase motor and 3 phase SD motor respectively.
In view of the continuous developments the Information / Descriptions / Specifications / Illustrations are subject to change without notice.

GENVIK
WE MAKE IT BETTER

Performance Data & Curve

Nominal Flow	160 gpm
Model	KV 160
Pipe Size	DN 65

PUMP MODEL	MOTOR POWER		DISCHARGE						
			m³/h	0	18.2	27.3	36.4	40.9	45.6
	kW	HP	US gpm	0	80	120	160	180	200
KV-S160/01-R3A	2.2	3	TOTAL MANOMETRIC HEAD IN FEET	75	74	65	52	45	32
KV-S160/01-R3	4	5.5		85	79	71	65	58	48
KV-S160/02-R3B	5	7.5		147	145	132	105	87	69
KV-S160/02-R3A	5	7.5		165	160	149	120	103	85
KV-S160/02-R3	5	7.5		175	172	165	140	121	100
KV-S160/03-R3B	7.5	10		231	230	210	170	150	119
KV-S160/03-R3	11	15		271	251	240	201	180	155
KV-S160/04-R3B	11	15		325	320	295	245	211	179
KV-S160/04-R3	11	15		359	345	321	270	240	209
KV-S160/05-R3B	15	20		410	409	380	315	271	239
KV-S160/05-R3	15	20		450	436	404	350	325	274
KV-S160/06-R3B	18.5	25		508	498	459	385	345	279
KV-S160/06-R3	18.5	25		541	527	490	420	370	319
KV-S160/07-R3B	18.5	25		596	585	540	457	400	335
KV-S160/07-R3	22	30		622	610	570	490	431	379
KV-S160/08-R3B	22	30		690	687	631	540	480	410
KV-S160/08-R3	22	30		731	715	659	572	512	442
KV-S160/09-R3B	30	40		789	771	710	610	541	462
KV-S160/09-R3	30	40		813	793	735	632	570	492
KV-S160/10-R3B	30	40		885	861	795	680	601	510
KV-S160/10-R3	30	40		920	890	820	710	640	551
KV-S160/11-R3B	30	40		970	950	877	751	670	572

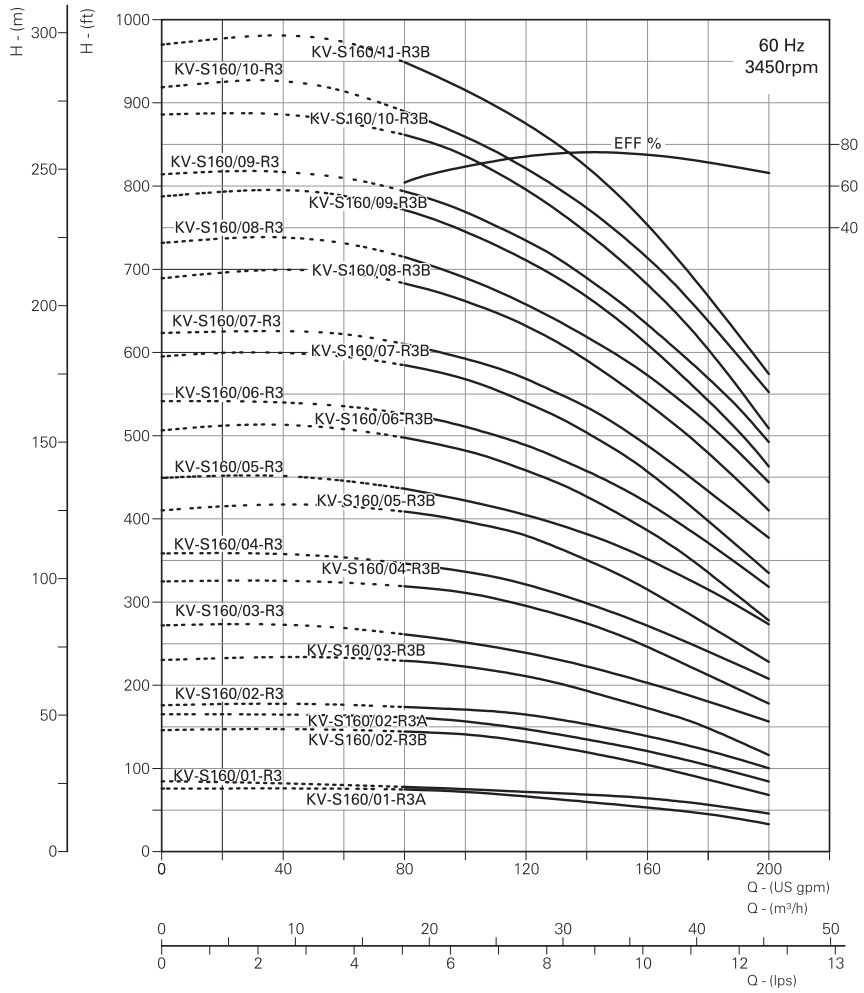

Replace the 3rd digit in model name as "C" for Cast Iron pump base & pump head models and "N" for AISI 316 construction.
The given performance is same for Type - C, S, N
Replace 'R' with 'L' and 'P' for Oval flange and PJE flange respectively.
The final digit of Model Identification '3' denotes 3 phase. Replace with '1' and '6' for 1 phase motor and 3 phase SD motor respectively.
In view of the continuous developments the Information / Descriptions / Specifications / Illustrations are subject to change without notice.

Performance Data & Curve

Nominal Flow	220 gpm
Model	KV 220
Pipe Size	DN 80

PUMP MODEL	MOTOR POWER		DISCHARGE							
			m³/h	0	23.3	36.4	45.5	50	54.6	69.1
	kW	HP	US gpm	0	120	160	200	220	240	304
KV-S220/01-R3A	5.5	7.5	TOTAL MANOMETRIC HEAD IN FEET	116	102	97	87	80	75	40
KV-S220/01-R3	5.5	7.5		130	120	110	101	98	91	70
KV-S220/02-R3B	11	15		220	203	192	179	166	155	90
KV-S220/02-R3A	11	15		237	220	205	190	180	168	105
KV-S220/02-R3	11	15		250	237	221	205	194	182	135
KV-S220/03-R3B	15	20		328	323	308	284	271	255	170
KV-S220/03-R3A	18.5	25		358	340	322	300	286	270	200
KV-S220/03-R3	18.5	25		370	359	341	320	304	290	208
KV-S220/04-R3B	22	30		440	442	422	392	371	350	250
KV-S220/04-R3A	22	30		479	460	440	410	390	364	270
KV-S220/04-R3	22	30		496	470	450	420	400	380	285
KV-S220/05-R3B	30	40		565	562	540	500	476	442	325
KV-S220/05-R3A	30	40		587	580	555	518	491	460	345
KV-S220/05-R3	30	40		612	598	568	530	504	478	365
KV-S220/06-R3B	37	50		685	684	658	612	587	555	410
KV-S220/06-R3	37	50		728	720	691	658	632	608	480
KV-S220/07-R3B	37	50		805	823	787	730	698	658	490
KV-S220/07-R3	45	60		855	858	822	770	739	700	537
KV-S220/08-R3A	45	60		982	950	920	870	834	798	610

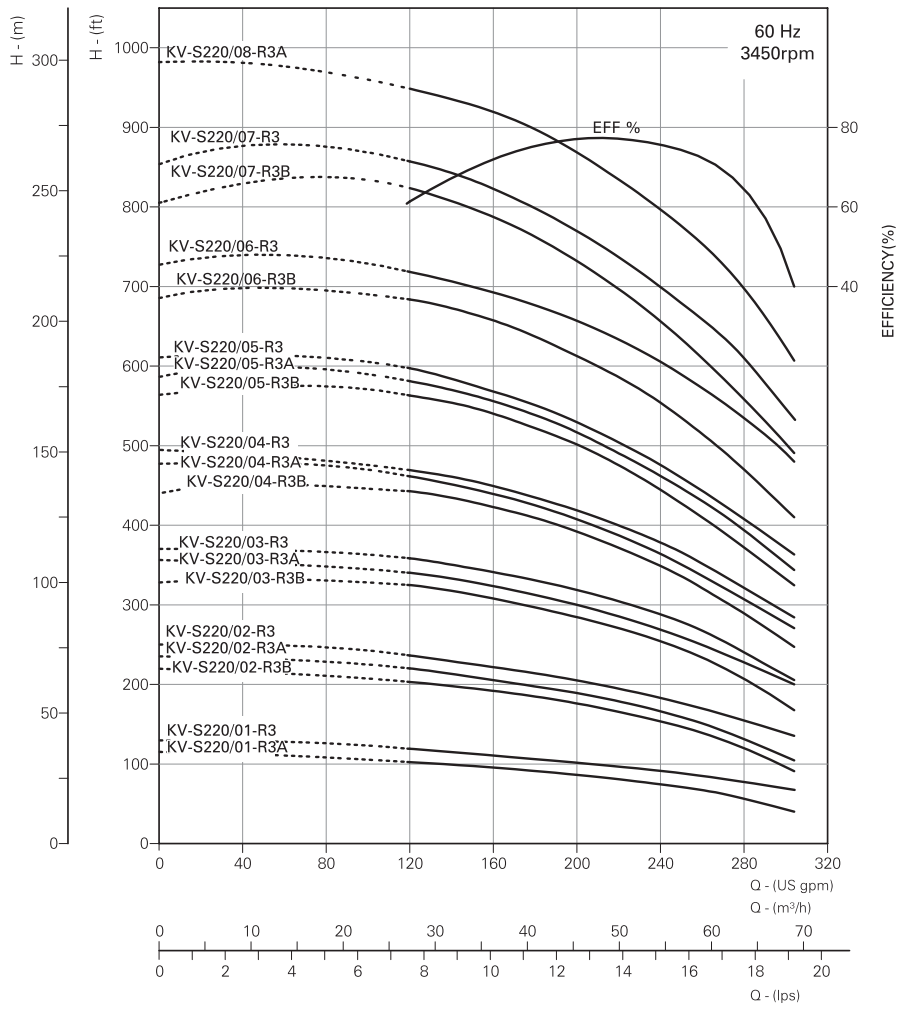

Replace the 3rd digit in model name as "C" for Cast Iron pump base & pump head models and "N" for AISI 316 construction.
The given performance is same for Type - C, S, N
Replace 'R' with 'L' and 'P' for Oval flange and PJE flange respectively.
The final digit of Model Identification '3' denotes 3 phase. Replace with '1' and '6' for 1 phase motor and 3 phase SD motor respectively.
In view of the continuous developments the Information / Descriptions / Specifications / Illustrations are subject to change without notice.

GENVIK
WE MAKE IT BETTER

Performance Data & Curve

Nominal Flow	330 gpm
Model	KV 330
Pipe Size	DN 100

PUMP MODEL	MOTOR POWER		DISCHARGE							
			m³/h	0	22.7	45.6	68.2	75	90.9	95.6
	kW	HP	US gpm	0	100	200	300	330	400	420
KV-S330/01-R3A	7.5	10	TOTAL MANOMETRIC HEAD IN FEET	116	108	100	88	78	55	48
KV-S330/01-R3	11	15		157	143	128	112	105	82	78
KV-S330/02-R3B	15	20		224	220	204	178	165	130	118
KV-S330/02-R3A	18.5	25		260	252	234	203	193	160	150
KV-S330/02-R3	22	30		300	284	260	230	220	180	170
KV-S330/03-R3B	22	30		360	353	330	291	272	224	210
KV-S330/03-R3A	30	40		400	390	363	322	309	255	240
KV-S330/03-R3	30	40		440	426	392	350	334	284	262
KV-S330/04-R3B	37	50		500	496	468	417	396	330	310
KV-S330/04-R3A	37	50		546	525	494	439	419	352	332
KV-S330/04-R3	45	60		580	565	536	480	458	384	364
KV-S330/05-R3B	45	60		640	636	605	540	511	430	402

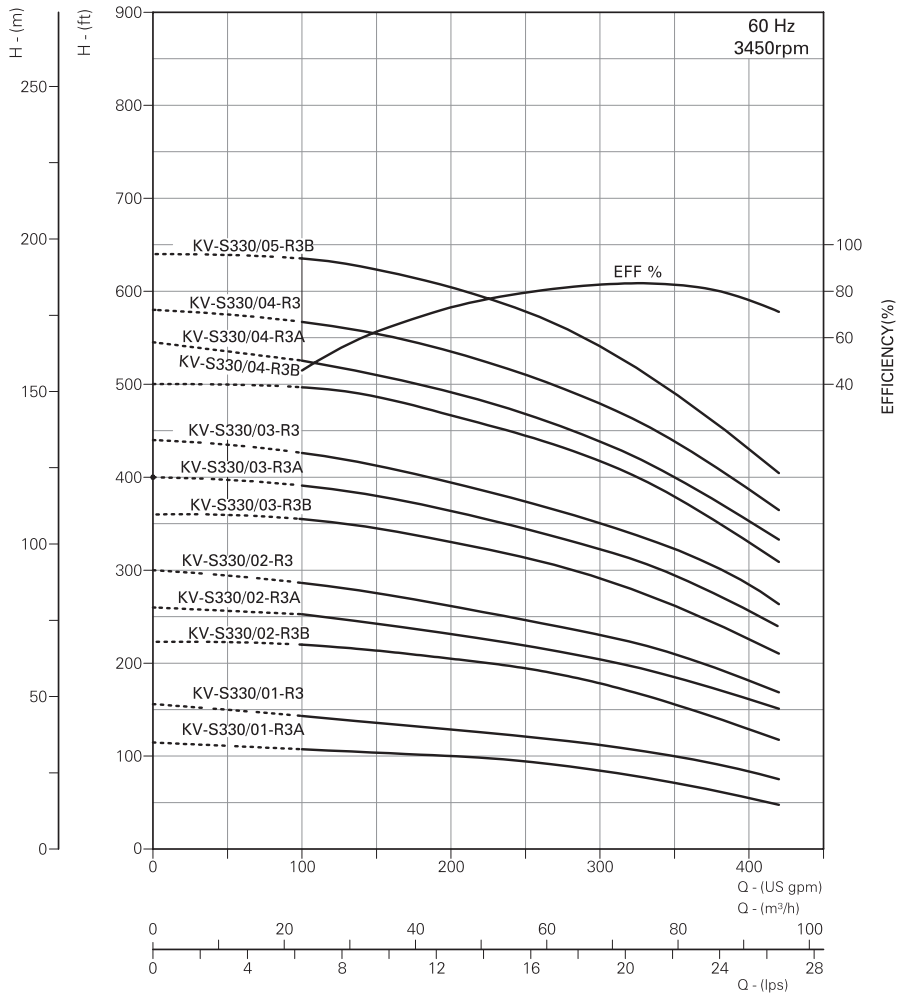

Replace the 3rd digit in model name as "C" for Cast Iron pump base & pump head models and "N" for AISI 316 construction.
The given performance is same for Type - C, S, N
Replace 'R' with 'L' and 'P' for Oval flange and PJE flange respectively.
The final digit of Model Identification '3' denotes 3 phase. Replace with '1' and '6' for 1 phase motor and 3 phase SD motor respectively.
In view of the continuous developments the Information / Descriptions / Specifications / Illustrations are subject to change without notice.

Performance Data & Curve

Nominal Flow	450 gpm
Model	KV 450
Pipe Size	DN 100

PUMP MODEL	MOTOR POWER		DISCHARGE							
			m³/h	0	45.6	68.2	90.9	102.3	113.6	120.5
	kW	HP	US gpm	0	200	300	400	450	500	530
KV-S450/01-R3A	11	15	TOTAL MANOMETRIC HEAD IN FEET	135	111	97	83	75	64	50
KV-S450/01-R3	15	20		157	130	117	100	91	78	61
KV-S450/02-R3B	18.5	25		265	231	208	182	169	146	122
KV-S450/02-R3A	22	30		295	251	227	200	185	161	140
KV-S450/02-R3	30	40		312	276	247	220	204	180	161
KV-S450/03-R3B	30	40		395	354	324	290	268	238	200
KV-S450/03-R3A	37	50		435	389	358	317	292	263	230
KV-S450/03-R3	37	50		464	410	378	340	320	291	270
KV-S450/04-R3B	45	60		564	511	469	423	395	360	335
KV-S450/04-R3A	45	60		592	535	493	440	414	380	352

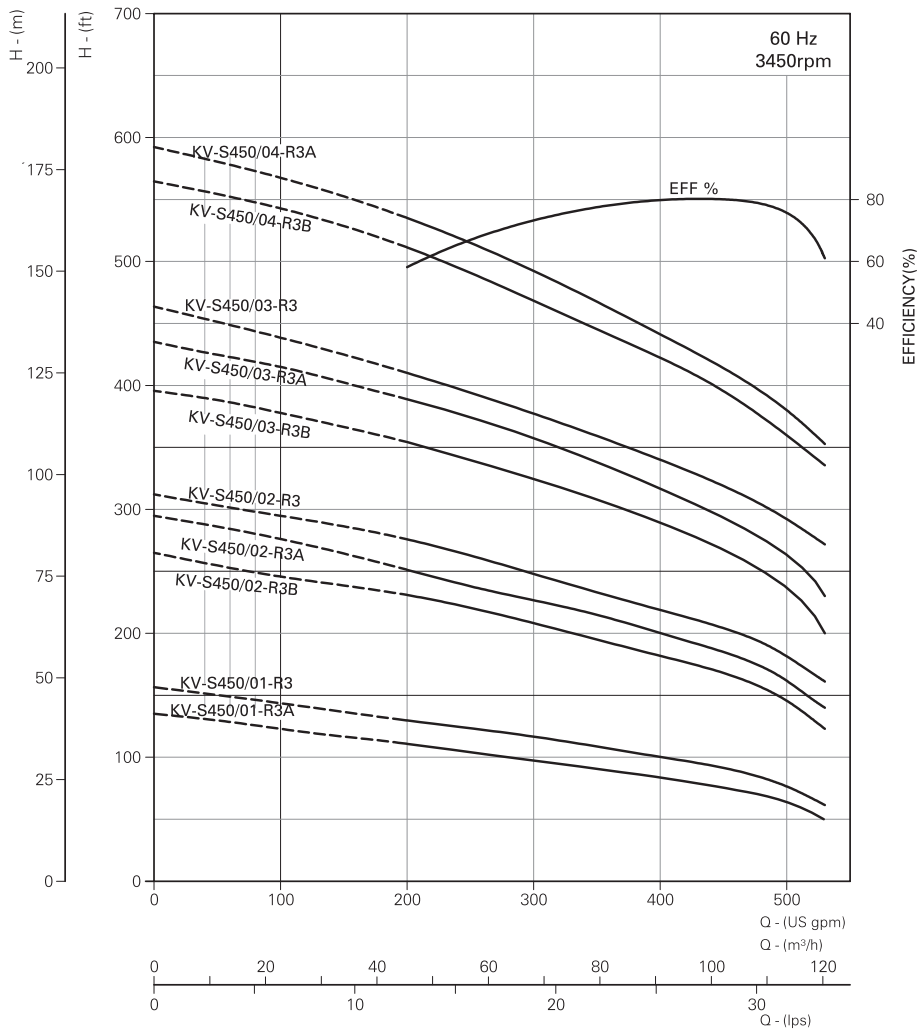

Replace the 3rd digit in model name as "C" for Cast Iron pump base & pump head models and "N" for AISI 316 construction.
The given performance is same for Type - C, S, N
Replace 'R' with 'L' and 'P' for Oval flange and PJE flange respectively.
The final digit of Model Identification '3' denotes 3 phase. Replace with '1' and '6' for 1 phase motor and 3 phase SD motor respectively.
In view of the continuous developments the Information / Descriptions / Specifications / Illustrations are subject to change without notice.

EXPLODED VIEW

KV 5 - 25 gpm

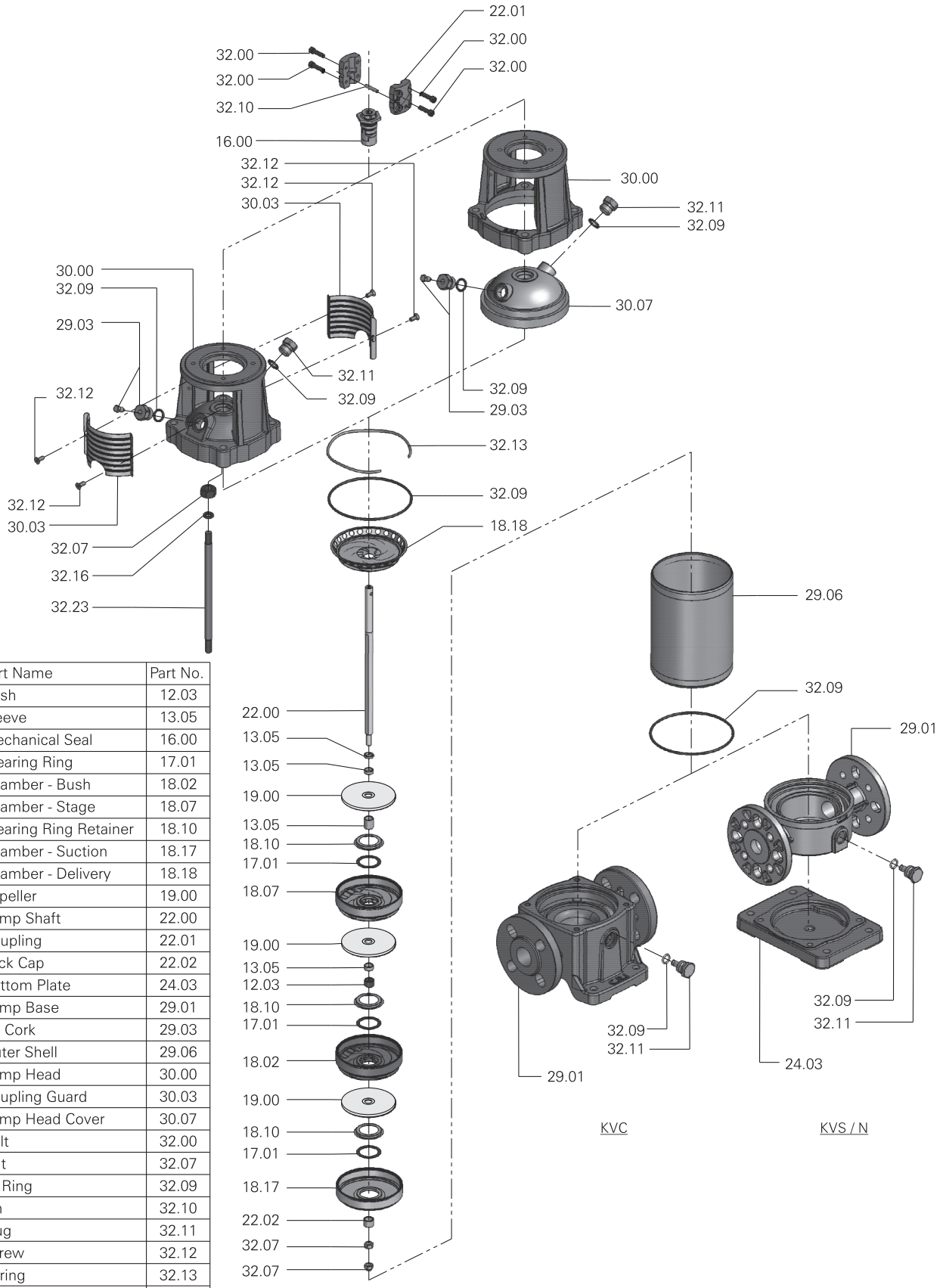

Part Name	Part No.
Bush	12.03
Sleeve	13.05
Mechanical Seal	16.00
Wearing Ring	17.01
Chamber - Bush	18.02
Chamber - Stage	18.07
Wearing Ring Retainer	18.10
Chamber - Suction	18.17
Chamber - Delivery	18.18
Impeller	19.00
Pump Shaft	22.00
Coupling	22.01
Lock Cap	22.02
Bottom Plate	24.03
Pump Base	29.01
Air Cork	29.03
Outer Shell	29.06
Pump Head	30.00
Coupling Guard	30.03
Pump Head Cover	30.07
Bolt	32.00
Nut	32.07
'O' Ring	32.09
Pin	32.10
Plug	32.11
Screw	32.12
Spring	32.13
Washer	32.16
Tie Rod	32.23

EXPLODED VIEW

KV 50 - 100 gpm

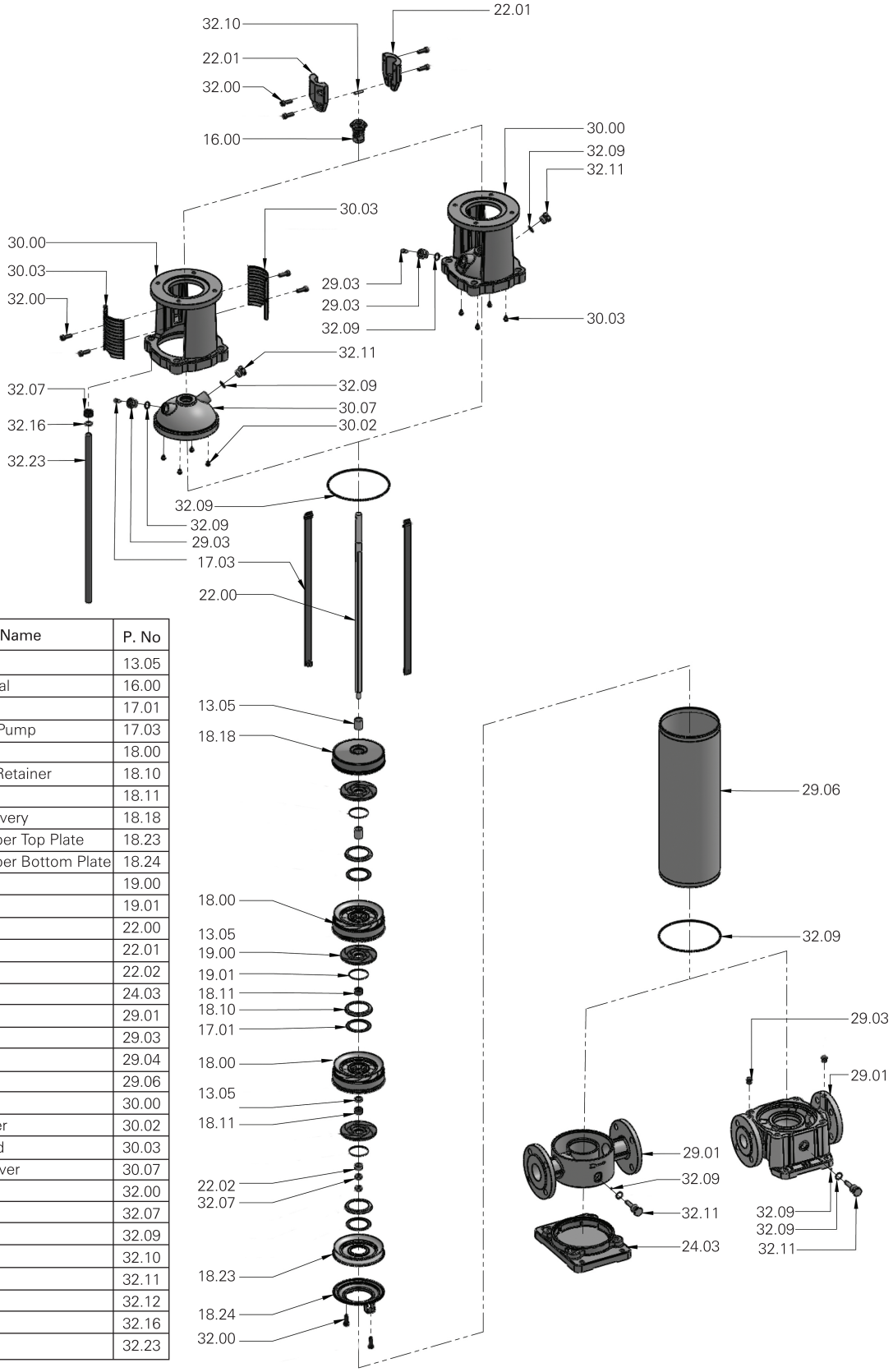

Parts Name	P. No
Sleeve	13.05
Mechanical Seal	16.00
Wearing Ring	17.01
Locking Strap-Pump	17.03
Chamber	18.00
Wearing Ring Retainer	18.10
Bearing Ring	18.11
Chamber - Delivery	18.18
Suction Chamber Top Plate	18.23
Suction Chamber Bottom Plate	18.24
Impeller	19.00
Neck Ring	19.01
Pump Shaft	22.00
Coupling	22.01
Lock Cap	22.02
Base Plate	24.03
Pump Base	29.01
Air Cork	29.03
Flange	29.04
Outer Shell	29.06
Pump Head	30.00
Rubber Arrester	30.02
Coupling Guard	30.03
Pump head Cover	30.07
Bolt	32.00
Nut	32.07
O-Ring	32.09
Pin	32.10
Plug	32.11
Screw	32.12
Washer	32.16
Tie Rod	32.23

EXPLODED VIEW

KV 160 - 450 gpm

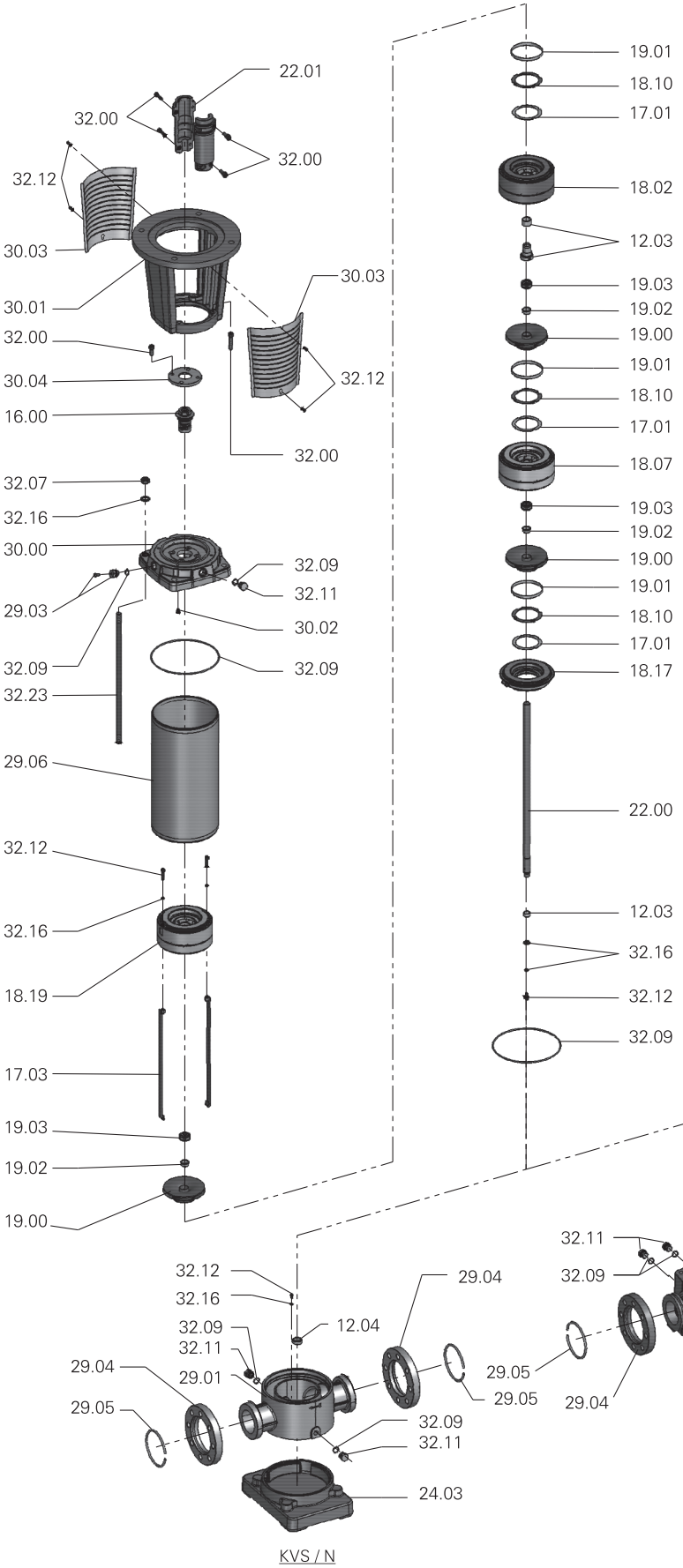

Part Name	Part No.
Bush	12.03
Bush Guide	12.04
Mechanical Seal	16.00
Wearing Ring	17.01
Locking Strap - Pump	17.03
Chamber - Stage	18.07
Chamber - Bush	18.02
Wearing Ring Retainer	18.10
Chamber - Suction	18.17
Chamber Top	18.19
Impeller	19.00
Neck Ring	19.01
Split Cone	19.02
Split Cone Nut	19.03
Pump Shaft	22.00
Coupling	22.01
Bottom Plate	24.03
Pump Base	29.01
Air Cork	29.03
Flange	29.04
Retaining Ring	29.05
Outer Shell	29.06
Pump Head	30.00
Pump Head Stool	30.01
Rubber Arrester	30.02
Coupling Guard	30.03
Seal Lock Plate	30.04
Bolt	32.00
Nut	32.07
"O" Ring	32.09
Plug	32.11
Screw	32.12
Washer	32.16
Tie Rod	32.23

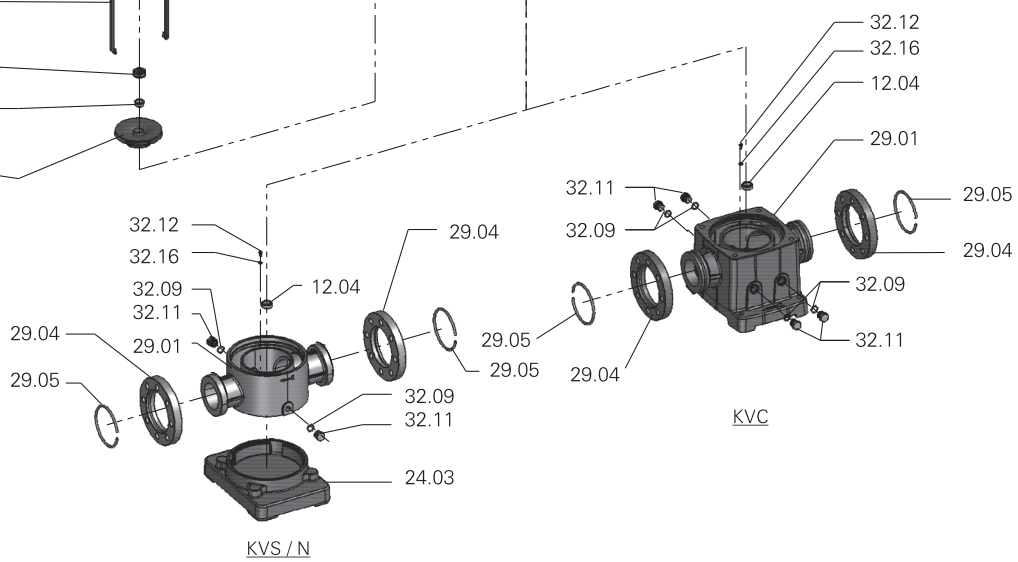

Dimensional Data & Drawings

PUMP MODEL	APPROX. DIMENSIONS (mm / Inch)																APPROX. NETT WEIGHT WITHOUT PACKING (kg / lb)									
	L1 KVC		L2				L3 KVS/N(PJE)		L4 KVS/N		X		Y (Ø)		Z		PUMP						MOTOR			
			1Ph		3Ph												KVC		KVS/N (PJE)		KVS / N		1Ph		3Ph	
	mm	Inch	mm	Inch	mm	Inch	mm	Inch	mm	Inch	mm	Inch	mm	Inch	mm	Inch	kg	lb	kg	lb	kg	lb	kg	lb	kg	lb
KV-S005/02-R3	269	10.6	222	8.7	217	8.5	249	9.8	273	10.7	113	4.4	140	5.5	145	5.7	18.6	41	13.2	29	15.0	33	9.1	20	8.2	18
KV-S005/03-R3	287	11.3	222	8.7	217	8.5	267	10.5	291	11.5	113	4.4	140	5.5	145	5.7	19.0	42	14.1	31	15.4	34	9.1	20	8.2	18
KV-S005/04-R3	305	12.0	222	8.7	217	8.5	285	11.2	309	12.2	113	4.4	140	5.5	145	5.7	20.0	44	14.5	32	16.3	36	9.1	20	8.2	18
KV-S005/05-R3	323	12.7	242	9.5	232	9.1	303	11.9	327	12.9	113	4.4	140	5.5	145	5.7	20.4	45	15.0	33	16.8	37	10.0	22	9.1	20
KV-S005/06-R3	341	13.4	242	9.5	232	9.1	321	12.6	345	13.6	113	4.4	140	5.5	145	5.7	20.9	46	15.9	35	17.2	38	10.0	22	9.1	20
KV-S005/07-R3	359	14.1	267	10.5	252	9.9	339	13.3	363	14.3	113	4.4	140	5.5	145	5.7	21.8	48	16.3	36	18.1	40	11.8	27	14.1	31
KV-S005/08-R3	377	14.8	267	10.5	252	9.9	357	14.1	381	15.0	113	4.4	140	5.5	145	5.7	22.2	49	16.8	37	18.6	41	11.8	27	14.1	31
KV-S005/09-R3	395	15.6	267	10.5	252	9.9	375	14.8	399	15.7	113	4.4	140	5.5	145	5.7	22.7	50	17.7	39	19.0	42	11.8	27	14.1	31
KV-S005/10-R3	413	16.3	284	11.2	264	10.4	393	15.5	417	16.4	118	4.6	160	6.3	145	5.7	23.6	52	18.1	40	20.0	44	15.0	33	14.1	31
KV-S005/11-R3	431	17.0	284	11.2	264	10.4	411	16.2	435	17.1	118	4.6	160	6.3	145	5.7	24.0	53	18.6	41	20.4	45	15.0	33	14.1	31
KV-S005/12-R3	449	17.7	284	11.2	264	10.4	429	16.9	453	17.8	118	4.6	160	6.3	145	5.7	24.5	54	19.5	43	20.9	46	15.0	33	14.1	31
KV-S005/13-R3	467	18.4	284	11.2	264	10.4	447	17.6	471	18.5	118	4.6	160	6.3	145	5.7	24.9	56	20.0	44	21.3	47	15.0	33	14.1	31
KV-S005/15-R3	503	19.8	294	11.6	295	11.6	483	19.0	507	20.0	136	5.4	187	7.4	163	6.4	26.3	58	21.3	47	22.7	50	20.0	44	20.0	44
KV-S005/17-R3	539	21.2	294	11.6	295	11.6	519	20.4	543	21.4	136	5.4	187	7.4	163	6.4	27.7	61	22.2	49	24.0	53	20.0	44	20.0	44
KV-S005/19-R3	575	22.6	320	12.6	295	11.6	555	21.9	579	22.8	136	5.4	187	7.4	163	6.4	28.6	64	23.6	52	24.9	55	24.0	53	20.0	44
KV-S005/21-R3	611	24.1	320	12.6	295	11.6	591	23.3	615	24.2	136	5.4	187	7.4	163	6.4	29.9	66	24.9	55	26.3	58	24.0	53	20.0	44
KV-S005/23-R3	647	25.5	320	12.6	295	11.6	627	24.7	651	25.6	136	5.4	187	7.4	163	6.4	31.3	69	25.9	57	27.7	61	24.0	53	20.0	44
KV-S005/25-R3	701	27.6	320	12.6	295	11.6	681	26.8	705	27.8	136	5.4	187	7.4	163	6.4	32.2	71	27.2	60	28.6	63	24.0	53	20.0	44
KV-S005/27-R3	737	29.0	-	-	320	12.6	717	28.2	741	29.2	136	5.4	187	7.4	163	6.4	33.6	74	28.1	63	29.9	66	-	-	24.0	53

NPSHR CURVE

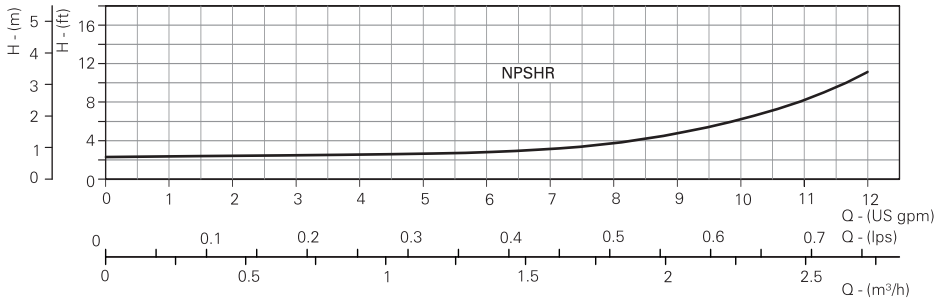

KVC (OVAL FLANGE)

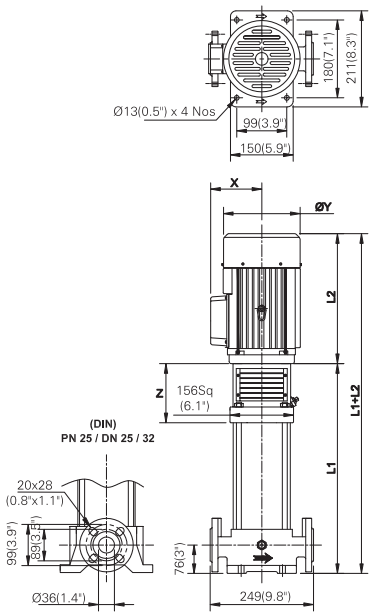

KVS & N (PJE)

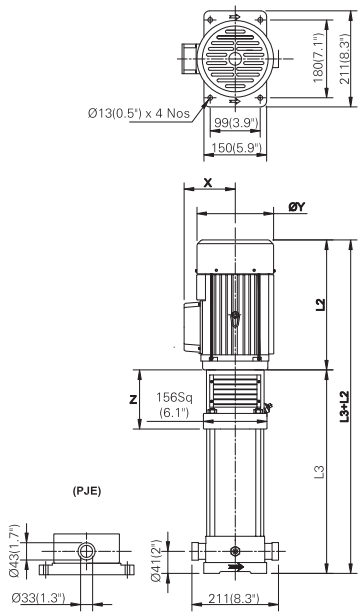

KVS & N (OVAL FLANGE)

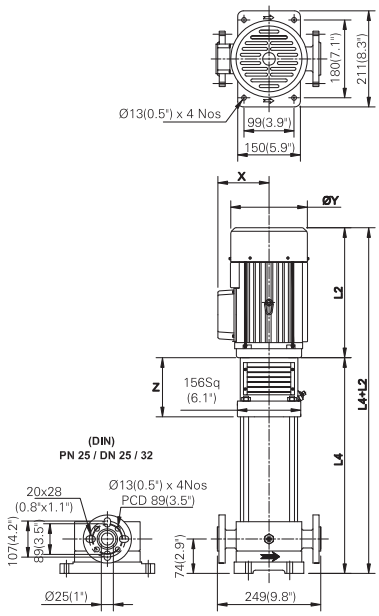

All Dimensions are in mm & Inches

GENVIK
WE MAKE IT BETTER

Dimensional Data & Drawings

PUMP MODEL	APPROX. DIMENSIONS (mm / Inch)																APPROX. NETT WEIGHT WITHOUT PACKING (kg / lb)									
	L1 KVC		L2				L3 KVS/N(PJE)		L4 KVS/N		X		Y (Ø)		Z		PUMP						MOTOR			
			1Ph		3Ph												KVC		KVS/N (PJE)		KVS / N		1Ph		3Ph	
	mm	Inch	mm	Inch	mm	Inch	mm	Inch	mm	Inch	mm	Inch	mm	Inch	mm	Inch	kg	lb	kg	lb	kg	lb	kg	lb	kg	lb
KV-S010/02-R3	269	10.6	222	8.7	217	8.5	249	9.8	273	10.7	113	4.4	140	5.5	145	5.7	18.6	41	13.2	29	15.0	33	9.1	20	8.2	18
KV-S010/03-R3	287	11.3	242	9.5	232	9.1	267	10.5	291	11.5	113	4.4	140	5.5	145	5.7	19.0	42	14.1	31	15.9	35	10.0	22	9.1	20
KV-S010/04-R3	305	12.0	267	10.5	252	9.9	285	11.2	309	12.2	113	4.4	140	5.5	145	5.7	20.0	44	15.0	33	16.3	36	11.8	26	14.1	31
KV-S010/05-R3	323	12.7	284	11.2	264	10.4	303	11.9	327	12.9	118	4.6	160	6.3	145	5.7	20.9	46	15.4	34	17.2	38	15.0	33	14.1	31
KV-S010/06-R3	341	13.4	284	11.2	264	10.4	321	12.6	345	13.6	118	4.6	160	6.3	145	5.7	21.3	47	16.3	36	17.7	39	15.0	33	14.1	31
KV-S010/07-R3	359	14.1	294	11.6	295	11.6	339	13.3	363	14.3	136	5.4	187	7.4	163	6.4	22.7	50	17.2	38	19.0	42	20.0	44	20.0	44
KV-S010/08-R3	377	14.8	320	12.6	295	11.6	357	14.1	381	15.0	136	5.4	187	7.4	163	6.4	23.1	51	18.1	40	19.5	43	24.0	53	24.0	53
KV-S010/09-R3	395	15.6	320	12.6	295	11.6	375	14.8	399	15.7	136	5.4	187	7.4	163	6.4	24.0	53	18.6	41	20.4	45	24.0	53	24.0	53
KV-S010/10-R3	413	16.3	320	12.6	295	11.6	393	15.5	417	16.4	136	5.4	187	7.4	163	6.4	24.5	54	19.5	43	20.9	46	24.0	53	24.0	53
KV-S010/11-R3	431	17.0	320	12.6	295	11.6	411	16.2	435	17.1	136	5.4	187	7.4	163	6.4	25.4	56	20.0	44	21.8	48	24.0	53	24.0	53
KV-S010/12-R3	449	17.7	320	12.6	295	11.6	465	18.3	489	19.3	136	5.4	187	7.4	163	6.4	25.9	57	20.9	46	22.7	50	24.0	53	24.0	53
KV-S010/13-R3	485	19.1	-	-	320	12.6	483	19.0	507	20.0	136	5.4	187	7.4	163	6.4	26.8	59	21.8	48	23.1	51	-	-	24.0	53
KV-S010/15-R3	521	20.5	-	-	320	12.6	501	19.7	525	20.7	136	5.4	187	7.4	163	6.4	28.1	62	23.1	51	24.5	54	-	-	24.0	53
KV-S010/18-R3	575	22.6	-	-	354	13.9	555	21.9	579	22.8	136	5.4	187	7.4	163	6.4	30.4	67	24.9	55	26.8	59	-	-	27.7	61

NPSHR CURVE

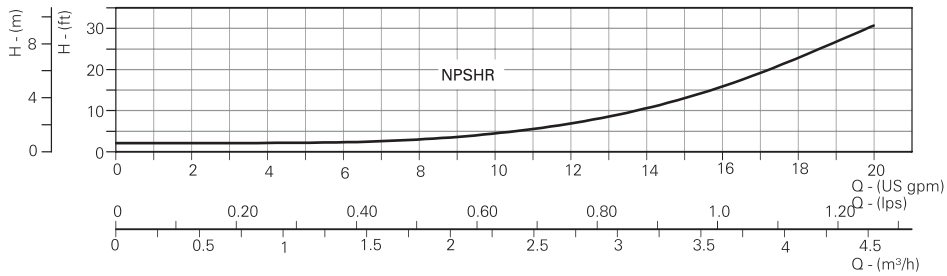

KVC (ROUND FLANGE)

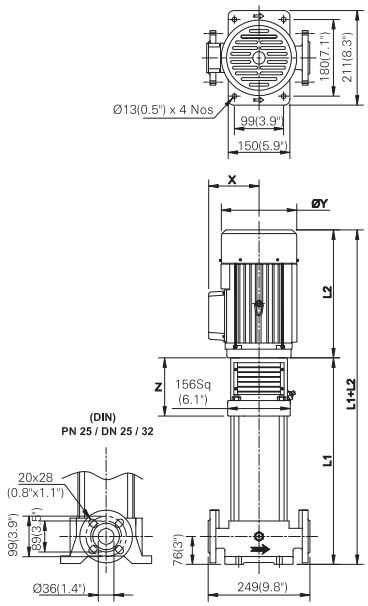

KVS & N (PJE)

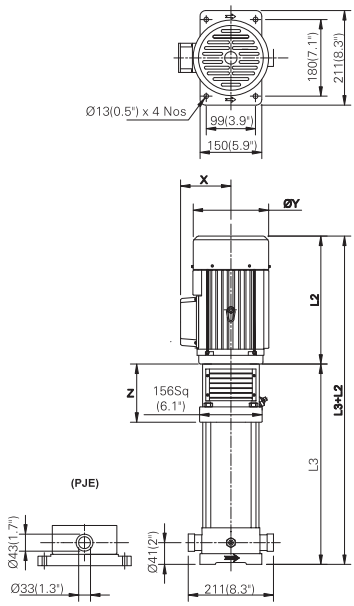

KVS & N (ROUND FLANGE)

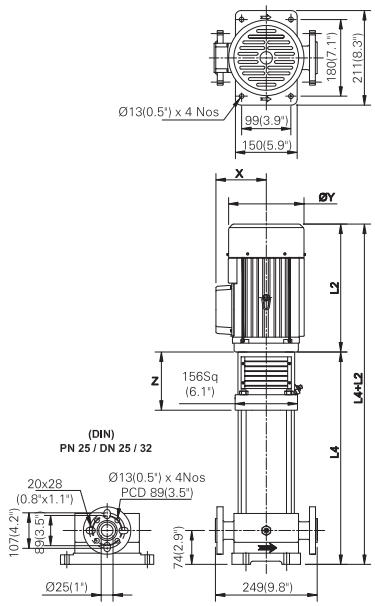

All Dimensions are in mm & Inches

Dimensional Data & Drawings

PUMP MODEL	APPROX. DIMENSIONS (mm / Inch)																APPROX. NETT WEIGHT WITHOUT PACKING (kg / lb)									
	L1 KVC		L2				L3 KVS/N(PJE)		L4 KVS/N		X		Y (Ø)		Z		PUMP						MOTOR			
			1Ph		3Ph												KVC		KVS/N (PJE)		KVS / N		1Ph		3Ph	
	mm	Inch	mm	Inch	mm	Inch	mm	Inch	mm	Inch	mm	Inch	mm	Inch	mm	Inch	kg	lb	kg	lb	kg	lb	kg	lb	kg	lb
KV-S015/02-R3	269	10.6	222	8.7	217	8.5	249	9.8	273	10.7	113	4.4	140	5.5	145	5.7	18.6	41	13.2	29	15.0	33	9.1	20	8.2	18
KV-S015/03-R3	287	11.3	222	8.7	217	8.5	267	10.5	291	11.5	113	4.4	140	5.5	145	5.7	19.0	42	14.1	31	15.4	34	10.0	22	9.1	20
KV-S015/04-R3	305	12.0	242	9.5	232	9.1	285	11.2	309	12.2	113	4.4	140	5.5	145	5.7	19.5	43	14.5	32	16.3	36	10.0	22	9.1	20
KV-S015/05-R3	323	12.7	267	10.5	252	9.9	303	11.9	327	12.9	113	4.4	140	5.5	145	5.7	20.4	45	15.0	33	16.8	37	11.8	26	14.1	31
KV-S015/06-R3	341	13.4	284	11.2	264	10.4	321	12.6	345	13.6	118	4.6	160	6.3	145	5.7	20.9	46	15.9	35	17.2	38	15.0	33	14.1	31
KV-S015/07-R3	359	14.1	284	11.2	264	10.4	339	13.3	363	14.3	118	4.6	160	6.3	145	5.7	21.3	47	16.3	36	17.7	39	15.0	33	14.1	31
KV-S015/08-R3	377	14.8	284	11.2	264	10.4	357	14.1	381	15.0	118	4.6	160	6.3	145	5.7	22.2	49	16.8	37	18.6	41	15.0	33	14.1	31
KV-S015/09-R3	395	15.6	294	11.6	295	11.6	375	14.8	399	15.7	136	5.4	187	7.4	163	6.4	23.1	51	18.1	40	19.5	43	20.0	44	20.0	44
KV-S015/10-R3	413	16.3	294	11.6	295	11.6	393	15.5	417	16.4	136	5.4	187	7.4	163	6.4	23.6	52	18.6	41	20.4	45	20.0	44	20.0	44
KV-S015/11-R3	431	17.0	294	11.6	295	11.6	411	16.2	435	17.1	136	5.4	187	7.4	163	6.4	24.5	54	19.0	42	20.9	46	20.0	44	20.0	44
KV-S015/12-R3	449	17.7	320	12.6	295	11.6	429	16.9	453	17.8	136	5.4	187	7.4	163	6.4	24.9	55	20.0	44	21.3	47	24.0	53	20.0	44
KV-S015/13-R3	467	18.4	320	12.6	295	11.6	447	17.6	471	18.5	136	5.4	187	7.4	163	6.4	25.4	56	20.4	45	22.2	49	24.0	53	20.0	44
KV-S015/15-R3	503	19.8	320	12.6	295	11.6	483	19.0	507	20.0	136	5.4	187	7.4	163	6.4	26.8	59	21.8	48	23.1	51	24.0	53	20.0	44
KV-S015/17-R3	557	21.9	320	12.6	295	11.6	537	21.1	561	22.1	136	5.4	187	7.4	163	6.4	28.1	62	22.7	50	24.5	54	24.0	53	20.0	44
KV-S015/19-R3	593	23.3	-	-	320	12.6	573	22.6	597	23.5	136	5.4	187	7.4	163	6.4	29.0	64	24.0	53	25.4	56	-	-	24.0	53
KV-S015/21-R3	629	24.8	-	-	320	12.6	609	24.0	633	24.9	136	5.4	187	7.4	163	6.4	30.4	67	25.4	56	26.8	59	-	-	24.0	53
KV-S015/23-R3	665	26.2	-	-	320	12.6	645	25.4	669	26.3	136	5.4	187	7.4	163	6.4	31.7	70	26.3	58	28.1	62	-	-	24.0	53
KV-S015/25-R3	701	27.6	-	-	320	12.6	681	26.8	705	27.8	136	5.4	187	7.4	163	6.4	32.7	72	27.7	61	29.0	64	-	-	24.0	53

NPSHR CURVE

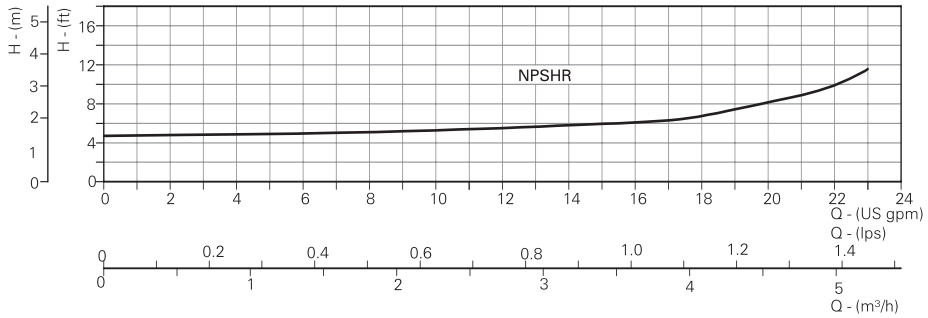

KVC (ROUND FLANGE)

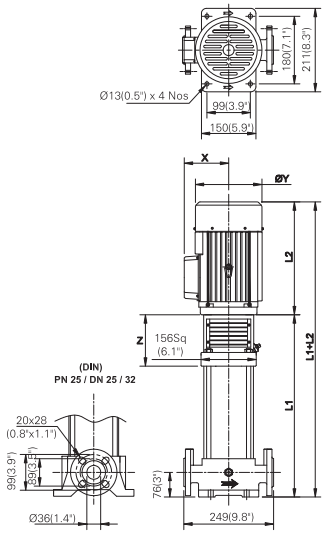

KVS & N (PJE)

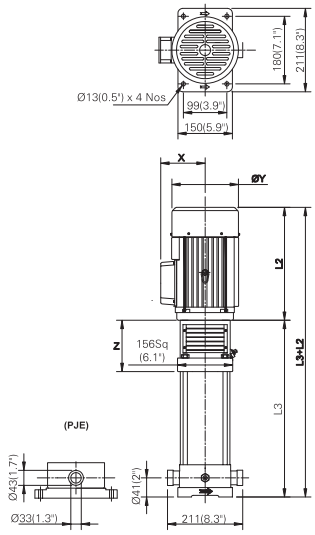

KVS & N (ROUND FLANGE)

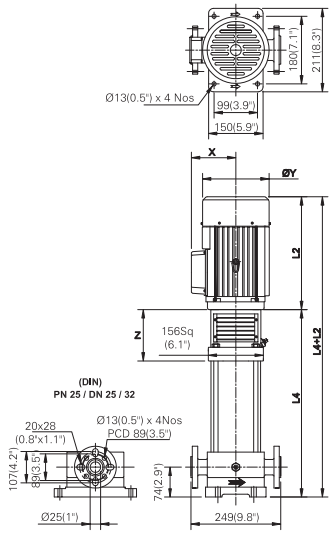

All Dimensions are in mm & Inches

GENVIK
WE MAKE IT BETTER

Dimensional Data & Drawings

PUMP MODEL	APPROX. DIMENSIONS (mm / Inch)																APPROX. NETT WEIGHT WITHOUT PACKING (kg / lb)									
	L1 KVC		L2				L3 KVS/N(PJE)		L4 KVS/N		X		Y (Ø)		Z		PUMP						MOTOR			
			1Ph		3Ph												KVC		KVS/N (PJE)		KVS / N		1Ph		3Ph	
	mm	Inch	mm	Inch	mm	Inch	mm	Inch	mm	Inch	mm	Inch	mm	Inch	mm	Inch	kg	lb	kg	lb	kg	lb	kg	lb	kg	lb
KV-S020/01-R3	287	11.3	222	8.7	217	8.5	267	10.5	291	11.5	113	4.4	140	5.5	145	5.7	21.8	48	16.8	37	18.1	40	9.1	20	8.2	18
KV-S020/02-R3	287	11.3	267	10.5	252	9.9	294	11.6	318	12.5	113	4.4	140	5.5	145	5.7	22.7	50	17.2	38	19.0	42	11.8	26	14.1	31
KV-S020/03-R3	314	12.4	267	10.5	252	9.9	321	12.6	345	13.6	113	4.4	140	5.5	145	5.7	23.1	51	18.1	40	19.5	43	11.8	26	14.1	31
KV-S020/04-R3	341	13.4	295	11.6	295	11.6	348	13.7	372	14.6	118	4.6	187	7.4	163	6.4	24.5	54	19.0	42	20.9	46	20.0	44	20.0	44
KV-S020/05-R3	368	14.5	320	12.6	295	11.6	375	14.8	399	15.7	118	4.6	187	7.4	163	6.4	24.9	55	20.0	44	21.8	48	24.0	53	20.0	44
KV-S020/06-R3	395	15.6	320	12.6	295	11.6	402	15.8	426	16.8	136	5.4	187	7.4	163	6.4	25.9	57	20.9	46	22.2	49	24.0	53	20.0	44
KV-S020/07-R3	440	17.3	-	-	320	12.6	447	17.6	471	18.5	136	5.4	187	7.4	163	6.4	26.8	59	21.3	47	23.1	51	-	-	21.3	47
KV-S020/08-R3	467	18.4	-	-	320	12.6	474	18.7	498	19.6	136	5.4	187	7.4	163	6.4	27.2	60	22.2	49	23.6	52	-	-	21.3	47
KV-S020/10-R3	521	20.5	-	-	354	13.9	528	20.8	552	21.7	136	5.4	187	7.4	163	6.4	28.6	63	23.6	52	24.9	55	-	-	27.7	61
KV-S020/12-R3	575	22.6	-	-	354	13.9	582	22.9	606	23.9	136	5.4	187	7.4	163	6.4	29.9	66	24.9	55	26.3	58	-	-	27.7	61
KV-S020/14-R3	629	24.8	-	-	385	15.2	636	25.0	660	26.0	204	8.0	204	8.0	197	7.8	32.7	72	27.2	60	29.0	64	-	-	41.3	91
KV-S020/16-R3	683	26.9	-	-	385	15.2	690	27.2	714	28.1	204	8.0	204	8.0	197	7.8	34.0	75	28.6	63	30.4	67	-	-	41.3	91

NPSHR CURVE

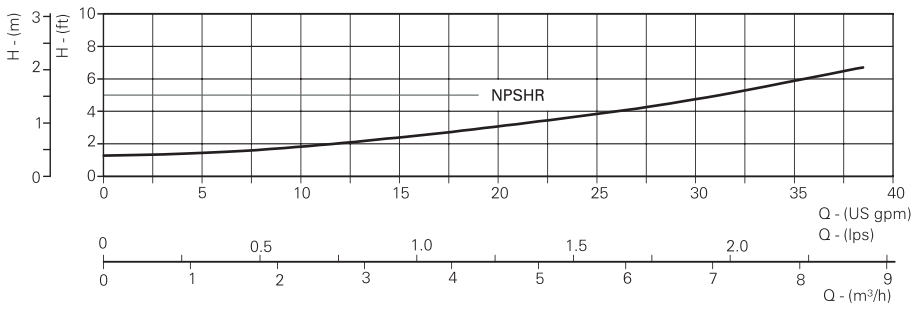

KVC (ROUND FLANGE)

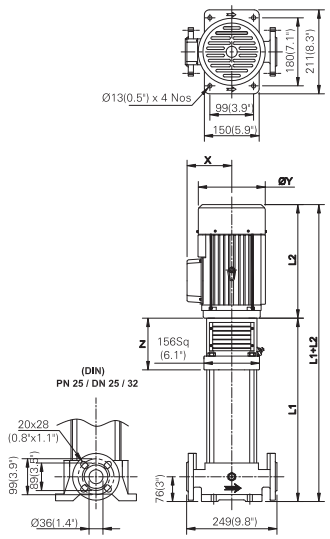

KVS & N (PJE)

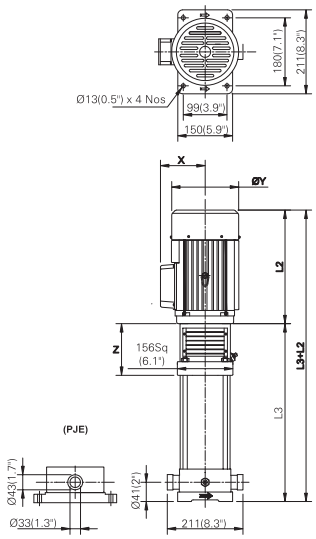

KVS & N (ROUND FLANGE)

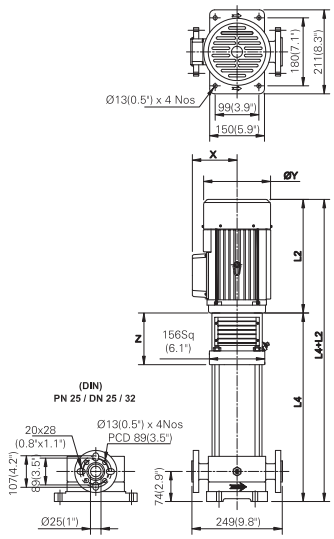

All Dimensions are in mm & Inches

Dimensional Data & Drawings

PUMP MODEL	APPROX. DIMENSIONS (mm / Inch)																APPROX. NETT WEIGHT WITHOUT PACKING (kg / lb)									
	L1 KVC		L2				L3 KVS/N(PJE)		L4 KVS/N		X		Y (Ø)		Z		PUMP						MOTOR			
			1Ph		3Ph												KVC		KVS/N (PJE)		KVS / N		1Ph		3Ph	
	mm	Inch	mm	Inch	mm	Inch	mm	Inch	mm	Inch	mm	Inch	mm	Inch	mm	Inch	kg	lb	kg	lb	kg	lb	kg	lb	kg	lb
KV-S025/02-R3	287	11.3	242	9.5	232	9.1	267	10.5	291	11.5	113	4.4	140	5.5	145	5.7	22.7	50	17.2	38	19.0	42	10.0	22	9.1	20
KV-S025/03-R3	314	12.4	284	11.2	264	10.4	294	11.6	318	12.5	118	4.6	160	6.3	145	5.7	23.6	52	18.1	40	20.0	44	15.0	33	14.1	31
KV-S025/04-R3	341	13.4	284	11.2	264	10.4	321	12.6	345	13.6	118	4.6	160	6.3	145	5.7	24.5	54	19.0	42	20.9	46	15.0	33	14.1	31
KV-S025/05-R3	368	14.5	294	11.6	295	11.6	348	13.7	372	14.6	136	5.4	187	7.4	163	6.4	25.9	57	20.4	45	22.2	49	20.0	44	20.0	44
KV-S025/06-R3	395	15.6	320	12.6	295	11.6	375	14.8	399	15.7	136	5.4	187	7.4	163	6.4	26.8	59	21.3	47	23.1	51	24.0	53	20.0	44
KV-S025/07-R3	422	16.6	320	12.6	295	11.6	402	15.8	426	16.8	136	5.4	187	7.4	163	6.4	27.7	61	22.2	49	24.0	53	24.0	53	20.0	44
KV-S025/08-R3	449	17.7	320	12.6	295	11.6	429	16.9	453	17.8	136	5.4	187	7.4	163	6.4	28.6	63	23.1	51	24.9	55	24.0	53	20.0	44
KV-S025/09-R3	494	19.4	320	12.6	295	11.6	474	18.7	498	19.6	136	5.4	187	7.4	163	6.4	29.5	65	24.0	53	25.9	57	24.0	53	20.0	44
KV-S025/10-R3	521	20.5	-	-	320	12.6	501	19.7	525	20.7	136	5.4	187	7.4	163	6.4	30.4	67	24.9	55	26.8	59	-	-	24.0	53
KV-S025/11-R3	548	21.6	-	-	320	12.6	528	20.8	552	21.7	136	5.4	187	7.4	163	6.4	31.3	69	25.9	57	27.7	61	-	-	24.0	53
KV-S025/12-R3	575	22.6	-	-	320	12.6	555	21.9	579	22.8	136	5.4	187	7.4	163	6.4	32.2	71	26.8	59	28.6	63	-	-	24.0	53
KV-S025/13-R3	602	23.7	-	-	340	13.4	582	22.9	606	23.9	136	5.4	187	7.4	163	6.4	32.7	72	27.7	61	29.5	65	-	-	27.7	61
KV-S025/14-R3	629	24.8	-	-	340	13.4	609	24.0	633	24.9	136	5.4	187	7.4	163	6.4	33.6	74	28.6	63	30.4	67	-	-	27.7	61
KV-S025/15-R3	656	25.8	-	-	340	13.4	636	25.0	660	26.0	136	5.4	187	7.4	163	6.4	34.5	76	29.5	65	31.3	69	-	-	27.7	61
KV-S025/16-R3	683	26.9	-	-	340	13.4	663	26.1	687	27.0	136	5.4	187	7.4	163	6.4	35.4	78	30.4	67	32.2	71	-	-	27.7	61
KV-S025/18-R3	737	29.0	-	-	385	15.2	717	28.2	741	29.2	204	8.0	257	10.1	197	7.8	38.5	85	33.1	73	34.9	77	-	-	41.3	91
KV-S025/20-R3	791	31.1	-	-	385	15.2	771	30.4	795	31.3	204	8.0	257	10.1	197	7.8	40.4	89	34.9	77	36.7	81	-	-	41.3	91
KV-S025/22-R3	845	33.3	-	-	385	15.2	825	32.5	849	33.4	204	8.0	257	10.1	197	7.8	42.2	93	36.7	81	38.5	85	-	-	41.3	91
KV-S025/24-R3	899	35.4	-	-	424	16.7	879	34.6	903	35.6	204	8.0	257	10.1	197	7.8	43.5	96	38.5	85	40.4	89	-	-	47.6	105

NPSHR CURVE

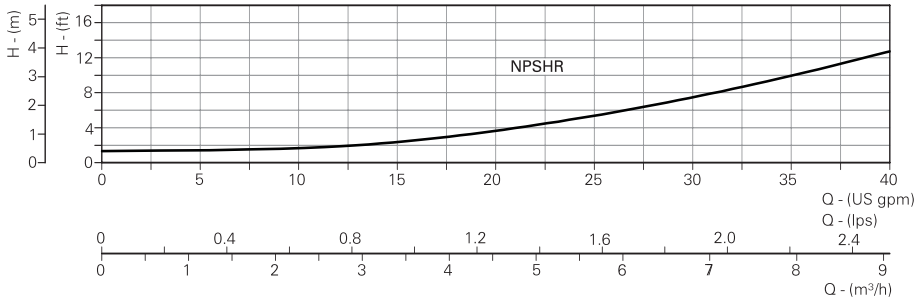

KVC (ROUND FLANGE)

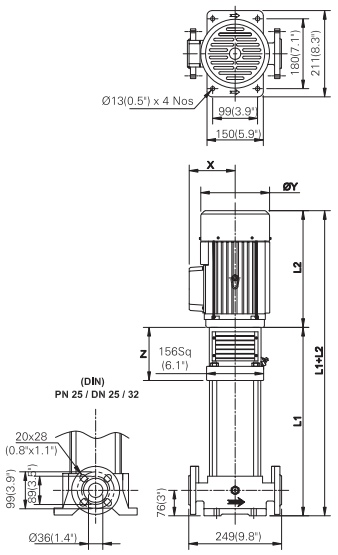

KVS & N (PJE)

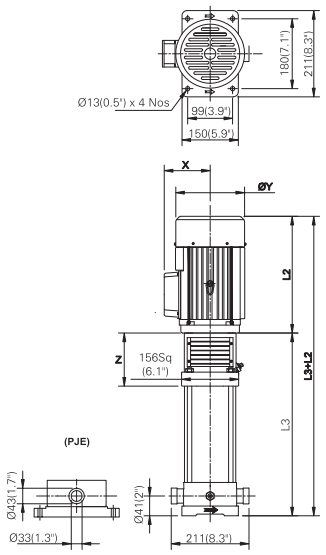

KVS & N (ROUND FLANGE)

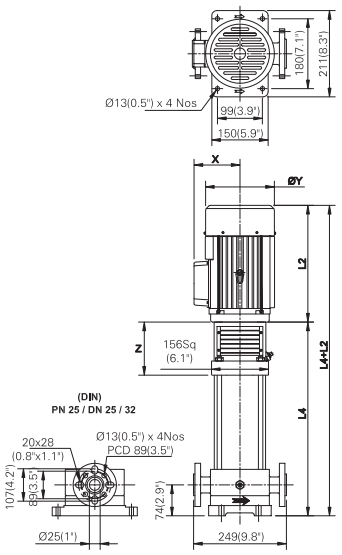

All Dimensions are in mm & Inches

Dimensional Data & Drawings

PUMP MODEL	APPROX. DIMENSIONS (mm / Inch)																APPROX. NETT WEIGHT WITHOUT PACKING (kg / lb)									
	L1 KVC		L2				L3 KVS/N(PJE)		L4 KVS/N		X		Y (Ø)		Z		PUMP						MOTOR			
			1Ph		3Ph												KVC		KVS/N (PJE)		KVS / N		1Ph		3Ph	
	mm	Inch	mm	Inch	mm	Inch	mm	Inch	mm	Inch	mm	Inch	mm	Inch	mm	Inch	kg	lb	kg	lb	kg	lb	kg	lb	kg	lb
KV-S050/01-R3	308	12	242	9.4	232	9	312	12.1	312	12.1	111.5	4.3	138	5.4	173	6.7	32.5	71.5	27.5	60.5	28.5	62.7	11	24.2	10	22
KV-S050/02-R3	338	13.1	284	11	265	10.3	342	13.3	342	13.3	120	4.6	138	5.4	173	6.7	33.5	73.7	28.5	62.7	29.5	64.9	13.5	29.7	13	28.6
KV-S050/03-R3	382	14.8	315	12.2	311	12.1	386	15	386	15	131	5.1	176	6.9	187	7.2	34.5	75.9	29.5	64.9	30.5	67.1	20	44	17.5	38.5
KV-S050/04-R3	412	16	315	12.2	311	12.1	416	16.2	416	16.2	131	5.1	176	6.9	187	7.4	35.5	78.1	30.5	67.1	31.5	69.3	20	44	17.5	38.5
KV-S050/05-R3	445	17.3	-	-	350	13.6	449	17.5	449	17.5	135	5.2	197	7.7	190	7.4	36.5	80.5	31.5	69.3	32.5	71.5	-	-	27.5	60.5
KV-S050/06-R3	475	18.5	-	-	350	13.6	479	18.6	479	18.6	135	5.2	197	7.7	190	8.4	37.5	82.5	32.5	71.5	33.5	78.1	-	-	27.5	60.5
KV-S050/07-R3	531	20.7	-	-	385	13.6	535	20.8	535	20.8	205	7.9	257	10	216	8.4	40.5	88	35.5	78.1	36.5	80.5	-	-	49	107.8
KV-S050/08-R3	561	21.8	-	-	385	13.6	565	22	565	22	205	7.9	257	10	216	8.4	41.5	91.3	36.5	80.5	37.5	82.5	-	-	49	107.8
KV-S050/09-R3	591	23	-	-	385	13.6	595	23.2	595	23.2	205	7.9	257	10	216	8.4	42.5	93.5	37.5	82.5	38.5	84.7	-	-	49	107.8
KV-S050/10-R3	621	24.2	-	-	385	13.6	625	24.3	625	24.3	205	7.9	257	10	216	8.4	43.5	95.7	38.5	84.7	39.5	86.9	-	-	49	111.1
KV-S050/12-R3	681	26.5	-	-	424	16.5	685	26.7	685	26.7	205	7.9	257	10	216	8.4	44.5	97.9	39.5	86.9	40.5	128.7	-	-	50.5	235.4
KV-S050/14-R3	830	32.3	-	-	500.5	19.5	834	32.5	834	32.5	261	10.1	314	12.2	305	11.8	63.5	139.7	58.5	128.7	59.5	133.1	-	-	107	235.4
KV-S050/16-R3	890	34.7	-	-	500.5	19.5	894	34.8	894	34.8	261	10.1	314	12.2	305	11.8	65.5	144.1	60.5	133.1	61.5	135.3	-	-	107	235.4
KV-S050/17-R3	920	35.8	-	-	500.5	19.5	924	36	924	36	261	10.1	314	12.2	305	11.8	66.5	146.3	61.5	135.3	62.5	137.5	-	-	107	235.4

NPSHR CURVE

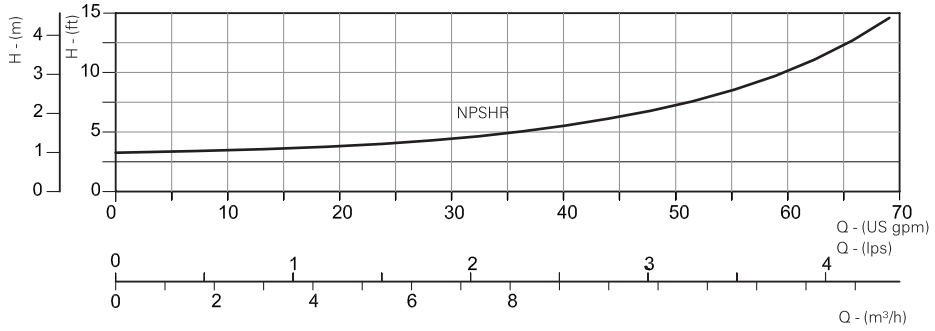

KVC (ROUND FLANGE)

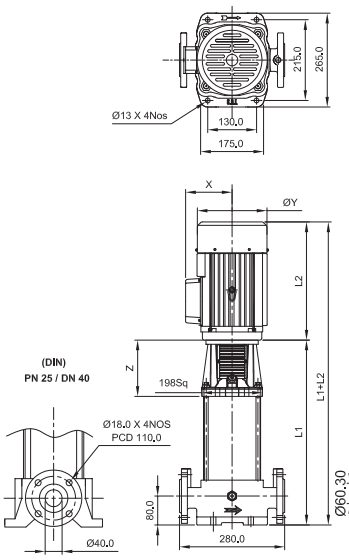

KVS & N (PJE)

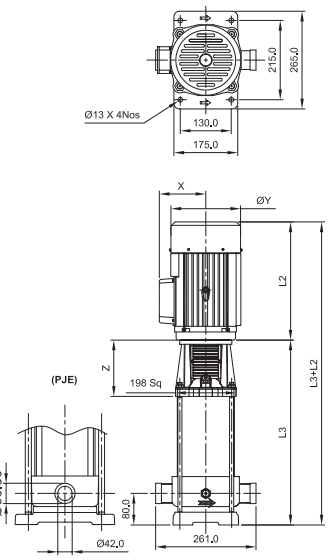

KVS & N (ROUND FLANGE)

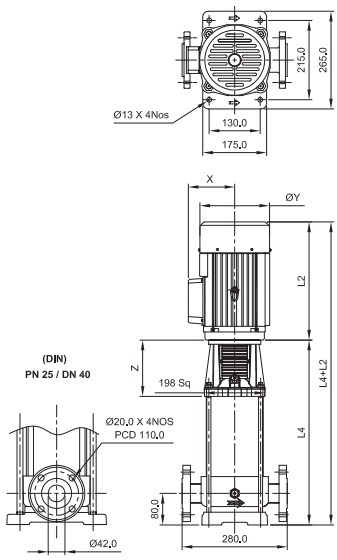

All Dimensions are in mm & Inches

Dimensional Data & Drawings

PUMP MODEL	APPROX. DIMENSIONS (mm / Inch)														APPROX. NETT WEIGHT WITHOUT PACKING (kg / lb)							
	L1		L2				L3		X		Y (Ø)		Z		PUMP				MOTOR			
			1 Ph		3 Ph										KVC		KVS / N		1Ph		3Ph	
	mm	Inch	mm	Inch	mm	Inch	mm	Inch	mm	Inch	mm	Inch	mm	Inch	kg	lb	kg	lb	kg	lb	kg	lb
KV-S075/01-R3	362	14.1	280	10.9	292	11.3	357	13.9	131	5.1	176	6.9	187	7.2	38	83.6	33	72.6	16.5	36.3	15	33
KV-S075/02-R3	407	15.8	-	-	350	13.6	402	15.6	162	6.3	187	7.2	187	7.2	39	85.8	34	74.8	-	-	27.5	60.5
KV-S075/03-R3	481	18.7	-	-	385	15	476	18.5	205	7.9	257	10	216	8.4	42	92.4	37	81.4	-	-	49	107.8
KV-S075/04-R3	526	20.5	-	-	385	15	521	20.3	205	7.9	257	10	216	8.4	43	94.6	38	83.6	-	-	49	107.8
KV-S075/05-R3	571	22.2	-	-	424	16.5	566	22	205	7.9	257	10	216	8.4	44	96.8	39	85.8	-	-	50.5	111.1
KV-S075/06-R3	705	27.4	-	-	500.5	19.5	700	27.3	261	10.1	314	12.2	305	11.8	63	138.6	58	127.6	-	-	107	235.4
KV-S075/07-R3	750	29.2	-	-	500.5	19.5	745	29	261	10.1	314	12.2	305	11.8	64	140.8	59	129.8	-	-	107	235.4
KV-S075/08-R3	795	31	-	-	500.5	19.5	790	30.8	261	10.1	314	12.2	305	11.8	65	143	60	132	-	-	107	235.4
KV-S075/09-R3	840	32.7	-	-	500.5	19.5	835	32.5	261	10.1	314	12.2	305	11.8	66	145.2	61	134	-	-	117	257.4
KV-S075/10-R3	885	34.5	-	-	500.5	19.5	880	34.3	261	10.1	314	12.2	305	11.8	67	147.4	62	136.4	-	-	117	257.4
KV-S075/12-R3	975	38	-	-	544.5	21.2	970	37.8	261	10.1	314	12.2	305	11.8	69	151.8	64	140.8	-	-	134	294.8

NPSHR CURVE

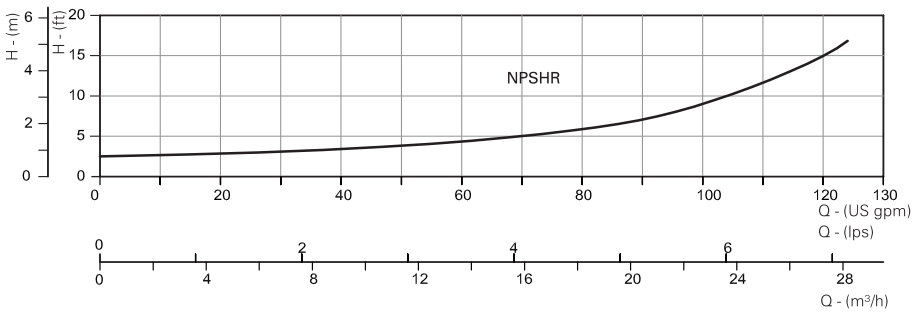

KVC (ROUND FLANGE)

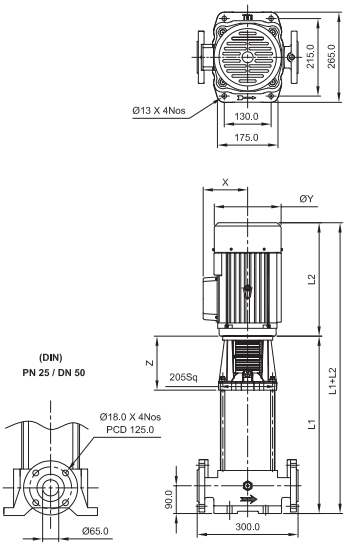

KVS & N (ROUND FLANGE)

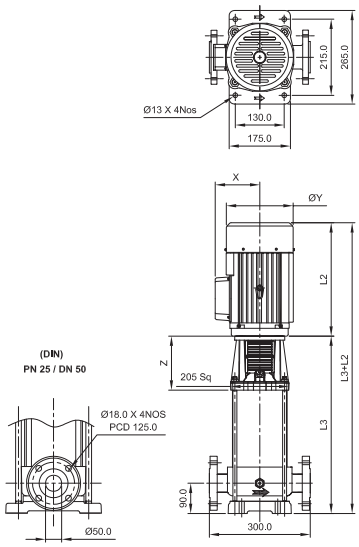

All Dimensions are in mm & Inches

GENVIK
WE MAKE IT BETTER

Dimensional Data & Drawings

PUMP MODEL	APPROX. DIMENSIONS (mm / Inch)														APPROX. NETT WEIGHT WITHOUT PACKING (kg / lb)							
	L1		L2				L3		X		Y (Ø)		Z		PUMP				MOTOR			
			1 Ph		3 Ph										KVC		KVS / N		1Ph		3Ph	
	mm	Inch	mm	Inch	mm	Inch	mm	Inch	mm	Inch	mm	Inch	mm	Inch	kg	lb	kg	lb	kg	lb	kg	lb
KV-S100/01-R3	362	14.1	315	12.2	311	12.1	357	13.9	131	5.1	176	6.9	187	7.2	38	83.6	33	72.6	20	44	17.5	38.5
KV-S100/02-R3	410	15.9	-	-	350	13.6	405	15.7	162	6.3	187	7.2	190	7.4	39	85.8	34	74.8	-	-	27.5	60.5
KV-S100/03-R3	481	18.7	-	-	385	15	476	18.5	205	7.9	257	10	216	8.4	42	92.4	37	81.4	-	-	49	107.8
KV-S100/04-R3	526	20.5	-	-	424	16.5	521	20.3	205	10.1	257	10	216	8.4	43	94.6	38	83.6	-	-	50.5	111.1
KV-S100/05-R3	660	25.7	-	-	500.5	19.5	655	25.5	261	10.1	314	12.2	305	11.8	62	136.4	57	125.4	-	-	107	235.4
KV-S100/06-R3	705	27.4	-	-	500.5	19.5	700	27.3	261	10.1	314	12.2	305	11.8	63	138.6	58	127.6	-	-	107	235.4
KV-S100/07-R3	750	29.2	-	-	500.5	19.5	745	29	261	10.1	314	12.2	305	11.8	64	140.8	59	129.8	-	-	117	257.4
KV-S100/08-R3	795	31	-	-	500.5	19.5	790	30.8	261	10.1	314	12.2	305	11.8	65	143	60	132	-	-	117	257.4
KV-S100/10-R3	885	34.5	-	-	544.5	21.2	880	34.3	261	10.1	314	12.2	305	11.8	67	147.4	62	136.4	-	-	134	294.8

NPSHR CURVE

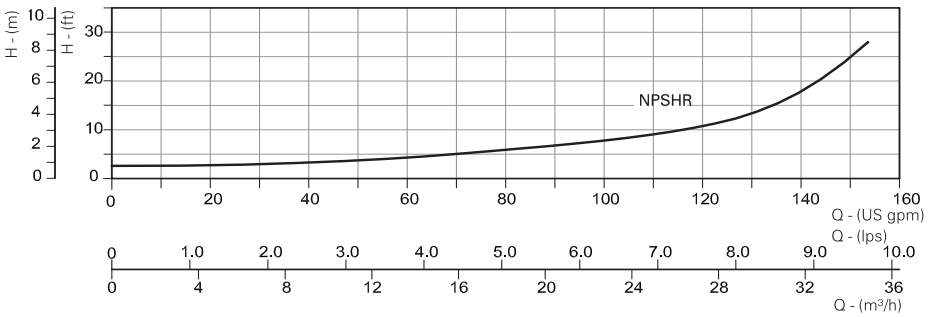

KVC (ROUND FLANGE)

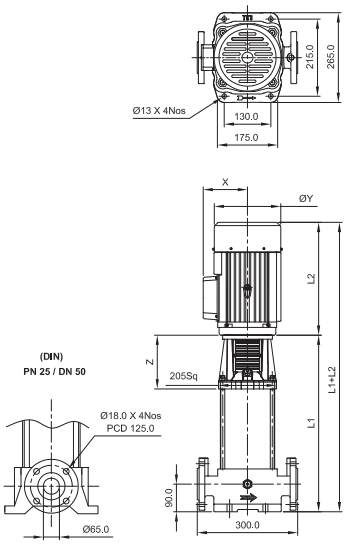

KVS & N (ROUND FLANGE)

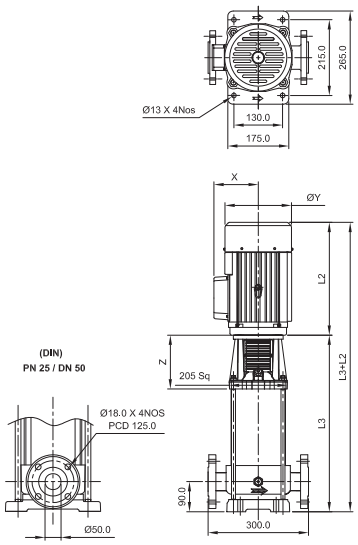

All Dimensions are in mm & Inches

Dimensional Data & Drawings

PUMP MODEL	APPROX. DIMENSIONS (mm / Inch)												APPROX. NETT WEIGHT WITHOUT PACKING (kg / lb)							
	L1 & L4 KVC / S / N		L2				X		Y (Ø)		Z		PUMP				MOTOR			
			1 Ph		3 Ph								KVC		KVS / N		1Ph		3Ph	
	mm	Inch	mm	Inch	mm	Inch	mm	Inch	mm	Inch	mm	Inch	kg	lb	kg	lb	kg	lb	kg	lb
KV-S160/01-R3A	510	20.1	294	11.6	295	11.6	136	5.4	187	7.4	201	7.9	58.5	129	63.5	140	24	53	20.0	44
KV-S160/01-R3	510	20.1	-	-	354	13.9	136	5.4	187	7.4	201	7.9	58.5	129	63.5	140	-	-	27.7	61
KV-S160/02-R3B	580	22.8	-	-	385	15.2	204	8.0	257	10.1	201	7.9	61.2	135	66.2	146	-	-	41.3	91
KV-S160/02-R3A	580	22.8	-	-	385	15.2	204	8.0	257	10.1	201	7.9	61.2	135	66.2	146	-	-	41.3	91
KV-S160/02-R3	580	22.8	-	-	385	15.2	204	8.0	257	10.1	201	7.9	61.2	135	66.2	146	-	-	41.3	91
KV-S160/03-R3B	650	25.6	-	-	424	16.7	204	8.0	257	10.1	201	7.9	63.5	140	68.5	151	-	-	47.6	105
KV-S160/03-R3	650	25.6	-	-	495	19.5	223	8.8	312	12.3	305	12.0	76.2	168	81.2	179	-	-	121.5	268
KV-S160/04-R3B	720	28.3	-	-	495	19.5	223	8.8	312	12.3	305	12.0	79.4	175	84.4	186	-	-	121.5	268
KV-S160/04-R3	720	28.3	-	-	495	19.5	223	8.8	312	12.3	305	12.0	79.4	175	84.4	186	-	-	121.5	268
KV-S160/05-R3B	895	35.2	-	-	495	19.5	223	8.8	312	12.3	305	12.0	82.5	182	87.5	193	-	-	130.6	288
KV-S160/05-R3	895	35.2	-	-	495	19.5	223	8.8	312	12.3	305	12.0	82.5	182	87.5	193	-	-	130.6	288
KV-S160/06-R3B	965	38.0	-	-	495	19.5	223	8.8	312	12.3	305	12.0	85.3	188	90.2	199	-	-	150.6	332
KV-S160/06-R3	965	38.0	-	-	495	19.5	223	8.8	312	12.3	305	12.0	85.3	188	90.2	199	-	-	150.6	332
KV-S160/07-R3B	1035	40.7	-	-	495	19.5	223	8.8	312	12.3	305	12.0	88.4	195	93.4	206	-	-	150.6	332
KV-S160/07-R3	1035	40.7	-	-	630	24.8	271	10.7	340	13.4	305	12.0	88.4	195	93.4	206	-	-	179.6	396
KV-S160/08-R3B	1105	43.5	-	-	630	24.8	271	10.7	340	13.4	305	12.0	88.4	201	96.1	206	-	-	179.6	396
KV-S160/08-R3	1105	43.5	-	-	630	24.8	271	10.7	340	13.4	305	12.0	91.2	201	96.1	212	-	-	179.6	396
KV-S160/09-R3B	1175	46.3	-	-	630	24.8	271	10.7	340	13.4	305	12.0	94.3	208	99.3	219	-	-	241.3	532
KV-S160/09-R3	1175	46.3	-	-	630	24.8	271	10.7	340	13.4	305	12.0	94.3	208	99.3	219	-	-	241.3	532
KV-S160/10-R3B	1245	49.0	-	-	630	24.8	271	10.7	340	13.4	305	12.0	97.5	215	102.5	226	-	-	241.3	532
KV-S160/10-R3	1245	49.0	-	-	630	24.8	271	10.7	340	13.4	305	12.0	97.5	215	102.5	226	-	-	241.3	532
KV-S160/11-R3B	1319	51.9	-	-	630	24.8	271	10.7	340	13.4	305	12.0	100.2	221	105.2	232	-	-	241.3	532

NPSHR CURVE

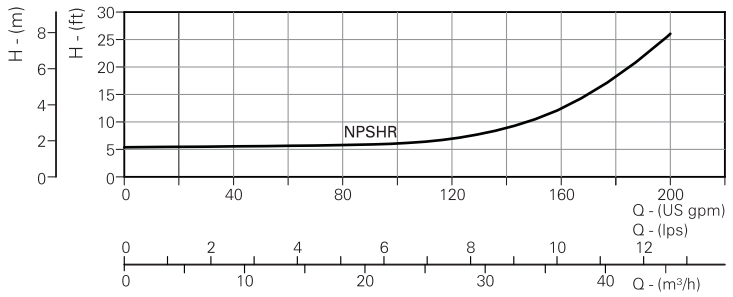

KVC (ROUND FLANGE)

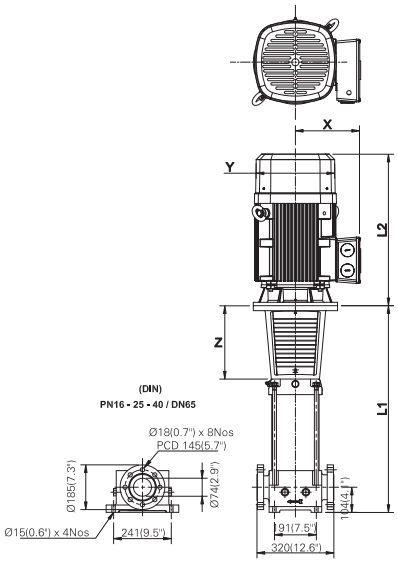

KVS & N (ROUND FLANGE)

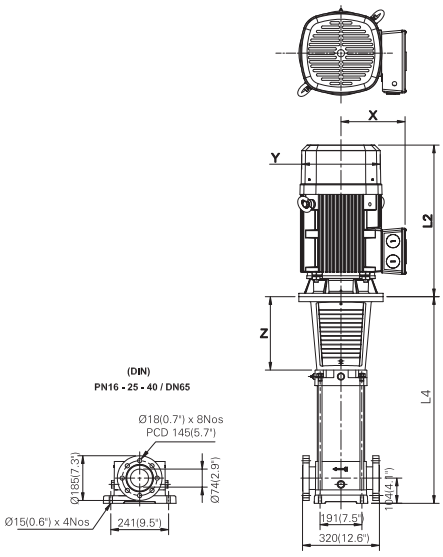

All Dimensions are in mm & Inches

Dimensional Data & Drawings

PUMP MODEL	APPROX. DIMENSIONS (mm / Inch)										APPROX. NETT WEIGHT WITHOUT PACKING (kg / lb)					
	L1 & L4 KVC / S / N		L2 3 Ph		X		Y (Ø)		Z		PUMP				MOTOR	
											KVC		KVS / N		3Ph	
	mm	Inch	mm	Inch	mm	Inch	mm	Inch	mm	Inch	kg	lb	kg	lb	kg	lb
KV-S220/01-R3A	564	22.2	385	15.2	204	8.0	257	10.1	201	7.9	30.4	67	29.0	64	18.7	41.3
KV-S220/01-R3	564	22.2	385	15.2	204	8.0	257	10.1	201	7.9	30.4	67	29.0	64	18.7	41.3
KV-S220/02-R3B	644	25.4	495	19.5	223	8.8	312	12.3	305	12.0	38.1	84	36.7	81	55.3	122
KV-S220/02-R3A	644	25.4	495	19.5	223	8.8	312	12.3	305	12.0	38.1	84	36.7	81	55.3	122
KV-S220/02-R3	644	25.4	495	19.5	223	8.8	312	12.3	305	12.0	38.1	84	36.7	81	55.3	122
KV-S220/03-R3B	828	32.6	495	19.5	223	8.8	312	12.3	305	12.0	40.4	89	39.0	86	59.4	131
KV-S220/03-R3A	828	32.6	495	19.5	223	8.8	312	12.3	305	12.0	40.4	89	39.0	86	68.5	151
KV-S220/03-R3	828	32.6	495	19.5	223	8.8	312	12.3	305	12.0	40.4	89	39.0	86	68.5	151
KV-S220/04-R3B	908	35.7	630	24.8	271	10.7	340	13.4	305	12.0	42.2	93	40.8	90	81.6	180
KV-S220/04-R3A	908	35.7	630	24.8	271	10.7	340	13.4	305	12.0	42.2	93	40.8	90	81.6	180
KV-S220/04-R3	908	35.7	630	24.8	271	10.7	340	13.4	305	12.0	42.2	93	40.8	90	81.6	180
KV-S220/05-R3B	988	38.9	630	24.8	271	10.7	340	13.4	305	12.0	44.0	97	42.6	94	109.8	242
KV-S220/05-R3A	988	38.9	630	24.8	271	10.7	340	13.4	305	12.0	44.0	97	42.6	94	109.8	242
KV-S220/05-R3	988	38.9	630	24.8	271	10.7	340	13.4	305	12.0	44.0	97	42.6	94	109.8	242
KV-S220/06-R3B	1068	42.0	650	25.6	276	10.9	395	15.6	305	12.0	47.2	104	45.8	101	117.0	258
KV-S220/06-R3	1068	42.0	650	25.6	276	10.9	395	15.6	305	12.0	47.2	104	45.8	101	117.0	258
KV-S220/07-R3B	1148	45.2	650	25.6	276	10.9	395	15.6	305	12.0	49.4	109	48.1	106	117.0	258
KV-S220/07-R3	1148	45.2	695	27.4	297	11.7	435	17.1	305	12.0	49.4	109	48.1	106	145.1	320
KV-S220/08-R3A	1228	48.3	695	27.4	297	11.7	435	17.1	305	12.0	51.2	113	49.9	110	145.1	320

NPSHR CURVE

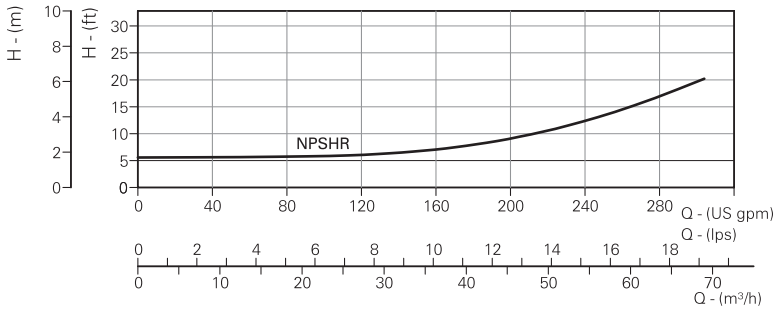

KVC (ROUND FLANGE)

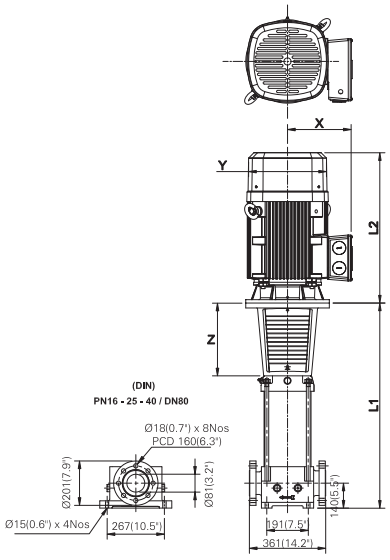

KVS & N (ROUND FLANGE)

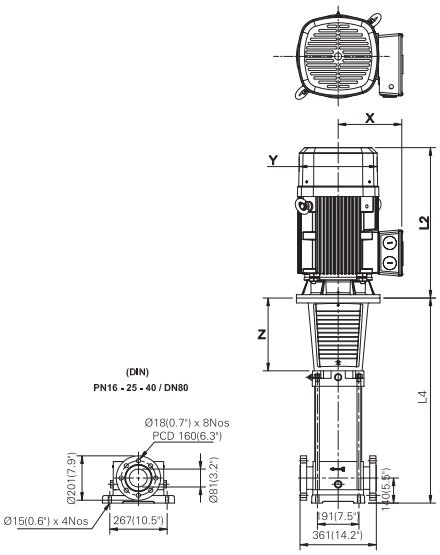

All Dimensions are in mm & Inches

Dimensional Data & Drawings

PUMP MODEL	APPROX. DIMENSIONS (mm / Inch)										APPROX. NETT WEIGHT WITHOUT PACKING (kg / lb)					
	L1 & L4 KVC / S / N		L2 3 Ph		X		Y (Ø)		Z		PUMP				MOTOR	
											KVC		KVS / N		3Ph	
	mm	Inch	mm	Inch	mm	Inch	mm	Inch	mm	Inch	kg	lb	kg	lb	kg	lb
KV-S330/01-R3A	564	22.2	424	16.7	204	8.0	257	10.1	201	7.9	97.5	215	80.3	177	41.3	91
KV-S330/01-R3	564	22.2	495	19.5	223	8.8	312	12.3	305	12.0	97.5	215	94.3	208	121.5	268
KV-S330/02-R3B	644	25.4	495	19.5	223	8.8	312	12.3	305	12.0	100.2	221	97.5	215	130.6	288
KV-S330/02-R3A	644	25.4	495	19.5	223	8.8	312	12.3	305	12.0	100.2	221	97.5	215	150.6	332
KV-S330/02-R3	644	25.4	630	24.8	271	10.7	340	13.4	305	12.0	100.2	221	97.5	215	179.6	396
KV-S330/03-R3B	828	32.6	630	24.8	271	10.7	340	13.4	305	12.0	104.3	230	101.1	223	179.6	396
KV-S330/03-R3A	828	32.6	630	24.8	271	10.7	340	13.4	305	12.0	104.3	230	101.1	223	241.3	532
KV-S330/03-R3	828	32.6	630	24.8	271	10.7	340	13.4	305	12.0	104.3	230	101.1	223	241.3	532
KV-S330/04-R3B	908	35.7	630	24.8	271	10.7	340	13.4	305	12.0	111.1	245	108.4	239	257.6	568
KV-S330/04-R3A	908	35.7	650	25.6	276	10.9	395	15.6	305	12.0	111.1	245	108.4	239	257.6	568
KV-S330/04-R3	908	35.7	650	25.6	276	10.9	395	15.6	305	12.0	111.1	245	108.4	239	319.3	704
KV-S330/05-R3B	988	38.9	695	27.4	276	10.9	435	17.1	305	12.0	115.2	254	112.5	248	319.3	704

NPSHR CURVE

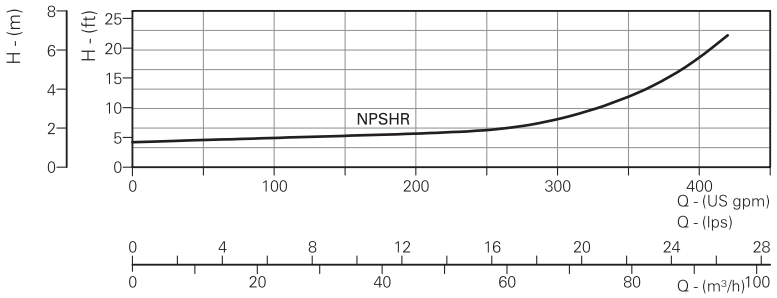

KVC (ROUND FLANGE)

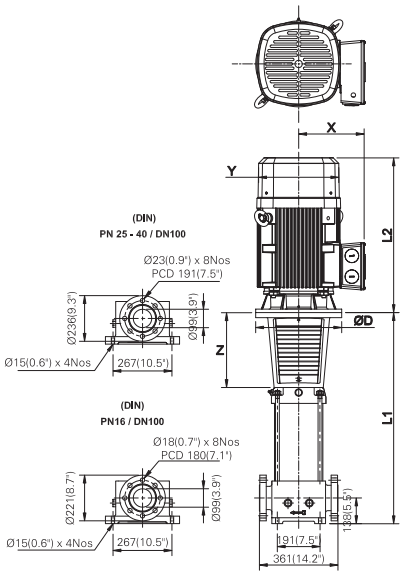

KVS & N (ROUND FLANGE)

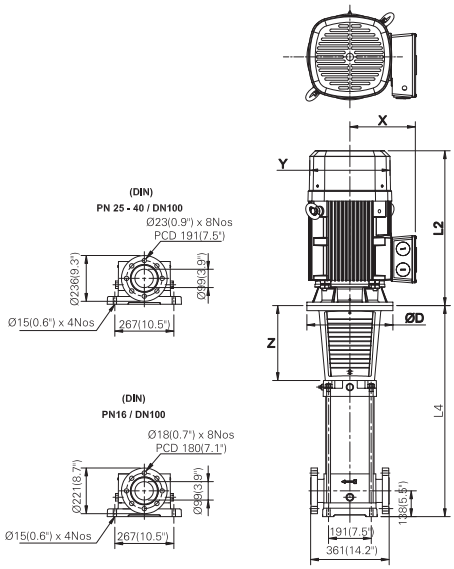

All Dimensions are in mm & Inches

Dimensional Data & Drawings

PUMP MODEL	APPROX. DIMENSIONS (mm / Inch)										APPROX. NETT WEIGHT WITHOUT PACKING (kg / lb)					
	L1 & L4 KVC / S / N		L2 3 Ph		X		Y (Ø)		Z		PUMP				MOTOR	
											KVC		KVS / N		3Ph	
	mm	Inch	mm	Inch	mm	Inch	mm	Inch	mm	Inch	kg	lb	kg	lb	kg	lb
KV-S450/01-R3A	572	22.5	495	19.5	223	8.8	312	12.3	305	12.0	42.6	94	41.7	92	55.3	122
KV-S450/01-R3	572	22.5	495	19.5	223	8.8	312	12.3	305	12.0	42.6	94	41.7	92	59.4	131
KV-S450/02-R3B	768	30.2	495	19.5	223	8.8	312	12.3	305	12.0	46.3	102	45.4	100	68.5	151
KV-S450/02-R3A	768	30.2	630	24.8	271	10.7	340	13.4	305	12.0	46.3	102	45.4	100	81.6	180
KV-S450/02-R3	768	30.2	630	24.8	271	10.7	340	13.4	305	12.0	46.3	102	45.4	100	109.8	242
KV-S450/03-R3B	860	33.9	630	24.8	271	10.7	340	13.4	305	12.0	51.2	113	50.3	111	109.8	242
KV-S450/03-R3A	860	33.9	650	25.6	276	10.9	395	15.6	305	12.0	51.2	113	50.3	111	117.0	258
KV-S450/03-R3	860	33.9	650	25.6	276	10.9	395	15.6	305	12.0	51.2	113	50.3	111	117.0	258
KV-S450/04-R3B	952	37.5	695	27.4	297	11.7	435	17.1	305	12.0	54.9	121	54.0	119	145.1	320
KV-S450/04-R3A	952	37.5	695	27.4	297	11.7	435	17.1	305	12.0	54.9	121	54.0	119	145.1	320

NPSHR CURVE

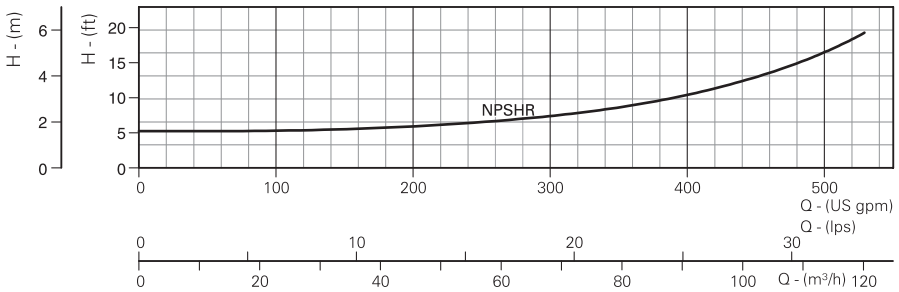

KVC (ROUND FLANGE)

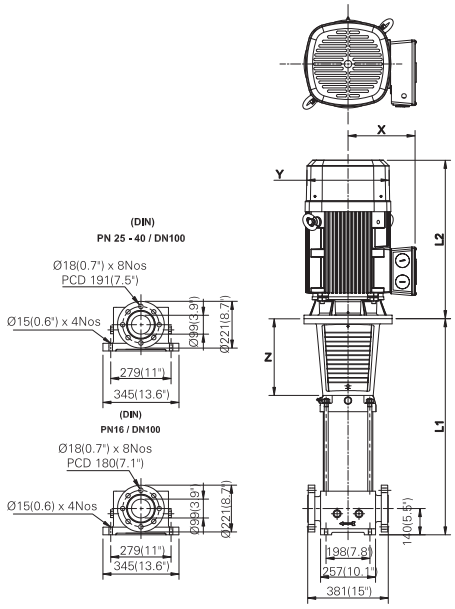

KVS & N (ROUND FLANGE)

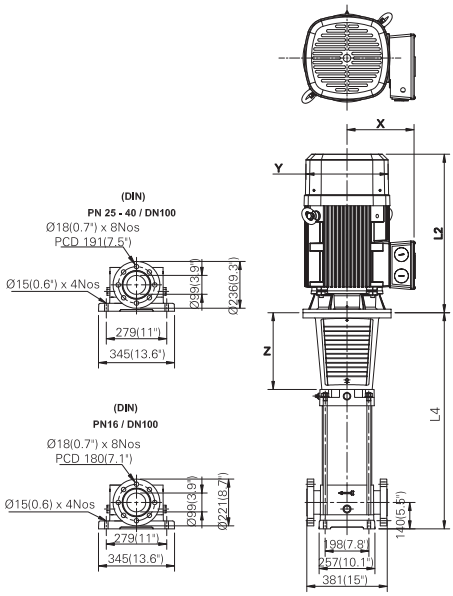

All Dimensions are in mm & Inches

GENVIK Horizontal Multistage centrifugal pumps are powered by a Totally Enclosed Fan Cooled, A.C. induction motor, suitable for continuous duty. Motor stator is made of low watt loss steel laminations assembled under pressure and rigidly locked in the frame. Dynamically balanced rotor ensures vibration and noise free operation and the vacuum impregnated windings made of enameled copper wire offer excellent resistance. Shaft of ample size made of quality steel and precisely ground is used for transmitting the rated Horsepower. Construction of motor frames and usage of quality materials result in high performance and low temperature rise thereby increasing the life cycle of the motor. Thermal over load protector (motor protector) is incorporated in single phase motors. These pumps require an adequate motor protection control panel.

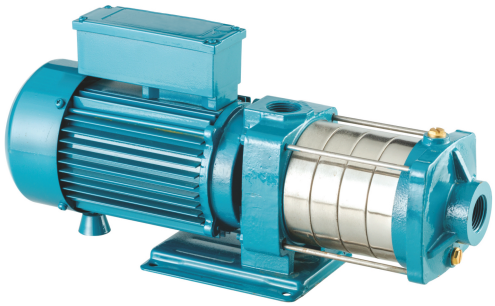

GENVIK Horizontal Multistage KH series pump is non-self priming, axial suction and vertical radial delivery type with threaded ports. All wetted components like impellers, diffusers and shaft of these pumps are made of corrosion resistant AISI stainless steel and designed to deliver the best possible hydraulic efficiency. The pump and motor are connected with a single drive shaft to eliminate any transmission loss. As the shaft, Impeller, diffusers and other vital components of the pump are made up of high grade stainless Steel AISI 304/316, these pumps can be used to pump high aggressive water and quite hygienic to use in drinking water systems too. Wear resistant bearings ensure better hydraulic efficiency and noiseless operation 'O' rings and gaskets prevent leakage at the intermediate casing during high pressure. Mechanical seals of these pumps are made of silicon Carbide to ensure reliability and easy replacement. These pumps are reliable, easy to install and designed for high end user comfort.

FEATURES

- High Operating efficiency
- Precise parts for hygiene
- Good suction lift and operating pressure
- Dynamically balanced rotating parts
- Balanced and rigid construction
- Available M.O.C. Type S, L & N
- Inbuilt thermal overload protector in all single phase pumps.

APPLICATIONS

- Residential & Industrial Pressure Boosting
- Small farms
- Washing systems
- Industrial water supply
- Reverse Osmosis systems
- Food processing industries
- Golf course.

MODEL IDENTIFICATION CODE

K X - X XXX / XX - X (H)

- (H): This digit is applicable only for high head models
- X: 1 = Single Phase - PSC; 2 = Single Phase - CSCR; 3 = Three Phase - DOL; 6 = Three Phase - SD
- XX: No of Impellers
- XXX: Nominal Flow (in US-gpm) Ex. 013 = 13 gpm
- X: Materials of Construction (M.O.C) Impeller / Diffuser / Pump Casing & Bracket / Pump Base
  - S = AISI 304 / AISI 304 / Cast Iron / M.S
  - L = AISI 304 / AISI 304 / Cast Steel 304 / M.S
  - N = AISI 316 / AISI 316 / Cast Steel 316 / M.S
- X: H - Horizontal
- K: K - GENVIK

TECHNICAL DATA

Power Range	0.40 HP to 4.0 HP
Speed	3450 rpm
Degree of protection	IP 54 / IP 55
Insulation class	B / F
Versions	Single Phase 220 / 230V, 60Hz, A.C. Supply (Permanent Split Capacitor-PSC) Incorporated with thermal protector. Three Phase 220 / 380 / 460V 60Hz
Sealing	Mechanical seal
Direction of rotation	Counter clockwise viewed from driving end
Type of Duty	S1 (continuous)
Nom.Suc.x Del.Size	1" x 1" ; 1½"x 1¼"

MATERIALS OF CONSTRUCTION

Pump Casing & Bracket	S.S. 304 / Cast Iron
Impeller	S.S. 304
Diffuser	S.S. 304
Motor Frame	Aluminum
Shaft	S.S. 410
Sealing	Mechanical Seal Standard : Sic | Sic | HNBR Optional : Sic | Sic | EPDM
Base Plate	Mild Steel

CHARACTERISTICS OF PUMPED LIQUIDS

a) Temperature	194°F (max.)
b) Permissible amount of sand	42 lb / 1000 gal (max.)
c) Chlorine ion density	500 ppm (max.)
d) Allowable solids	3000 ppm (max.)
e) Specific gravity	1.004 (max.)
f) Hardness (Drinking water)	300 (max.)
g) Viscosity	$1.75 \times 10^{-6} m^2$ / Sec. (max.)
h) Turbidity	50 ppm silica scale (max.)
i) pH	6.5 to 8.5

OPERATING LIMITS

Maximum Liquid Temperature : 194° F

Maximum Ambient Temperature : 104° F

Maximum Operating Pressure : 0.55 Mpa (5.5 bar)

Max. Operating Pressure	1 mpa (10bar)	0.6 mpa (6bar)
KH-13 & 26	32°F to 104°F	105°F to 194°F
KH-40 & 60	32°F to 131°F	131°F to 194°F

PERFORMANCE CURVE CONDITIONS

- The conditions below apply to the curves shown on the following pages.
- Curve tolerance are according to ISO 9906, Grade 3B.
- The performance are taken at rated voltage & speed that are only indicative.
- Actual discharge depends on availability of water in well / tank, height of water column from the suction pipe end.
- The measurements were made with airless water at 68°F. When pumping liquids with a density higher than of water, motors with correspondingly higher outputs must be used.
- The bold curves indicate the recommended performance range.
- Pipe firction losses have not been included in the performance curves & performance tables.

Performance Curve & Table

Nominal Flow	13 gpm
Model	KH 13
Pipe Size	DN 1" X 1"

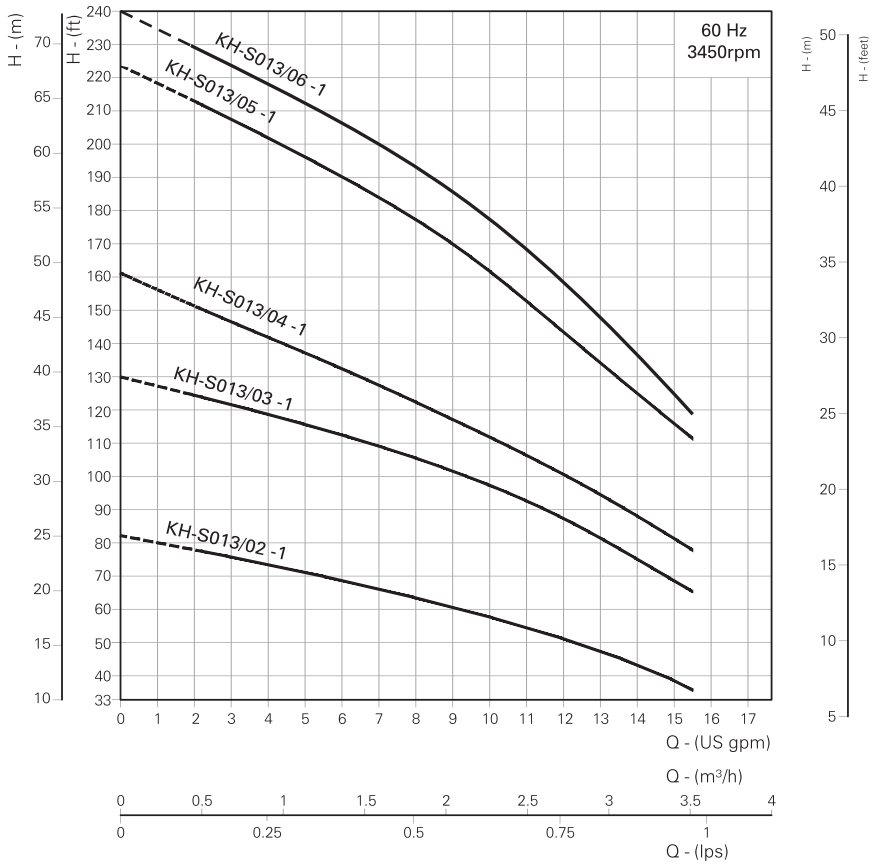

PUMP MODEL	MOTOR POWER - P2		DISCHARGE						
			gpm	0	4	7	10	13	15.5
	kW	HP	m³/h	0	0.9	1.6	2.3	3	3.5
KH-S013/02 - 1	0.3	0.4	TOTAL MANOMETRIC HEAD IN FEET	82	74	66	57	47	35
KH-S013/03 - 1	0.37	0.5		130	118	109	97	81	64
KH-S013/04 -1	0.55	0.75		161	142	127	112	94	78
KH-S013/05 -1	0.75	1		223	202	184	161	134	111
KH-S013/06 -1	0.9	1.2		240	217	200	177	148	118

Replace the 3rd digit in model name as "C" for Cast Iron pump base & pump head models and "N" for AISI 316 construction.
The given performance is same for Type - C, S, N
Replace 'R' with 'L' and 'P' for Oval flange and PJE flange respectively.
The final digit of Model Identification '1' denotes 1 phase. Replace with '3' and '6' for 3 phase DOL motor and 3 phase SD motor respectively.
In view of the continuous developments the Information / Descriptions / Specifications / Illustrations are subject to change without notice.

GENVIK
WE MAKE IT BETTER

Performance Curve & Table

Nominal Flow	26 gpm
Model	KH 26
Pipe Size	DN 1" X 1"

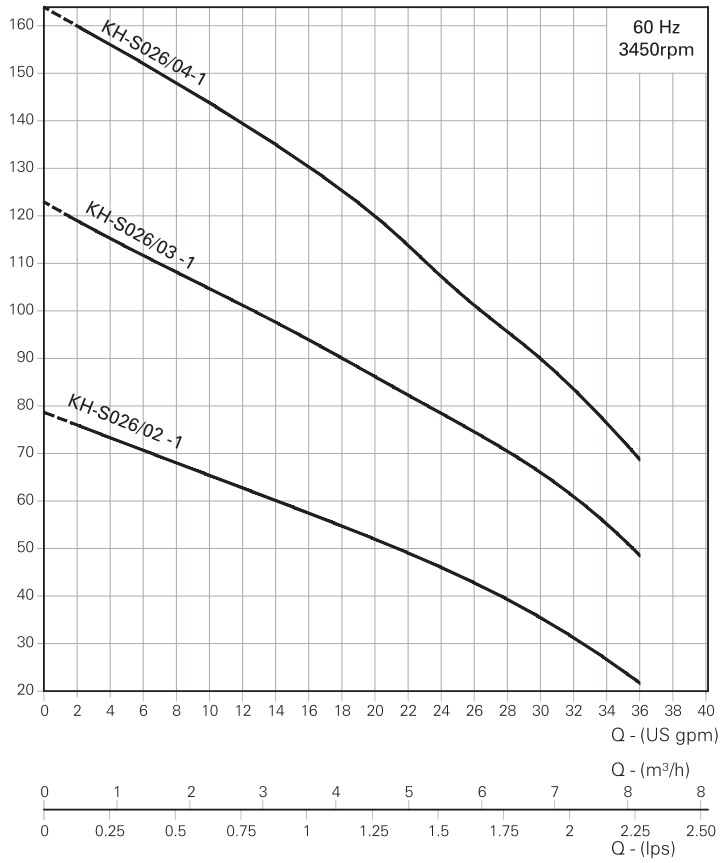

PUMP MODEL	MOTOR POWER - P2		DISCHARGE							
			gpm	0	8	14	20	26	32	36
	kW	HP	m³/h	0	1.8	3.2	4.5	5.9	7.3	8.2
KH-S026/02 -1	0.55	0.75	TOTAL MANOMETRIC HEAD IN FEET	79	68	60	52	43	31	21
KH-S026/03 - 1	0.75	1		123	108	97	86	75	61	49
KH-S026/04 -1	1.1	1.5		164	148	135	120	101	84	69

Replace the 3rd digit in model name as "C" for Cast Iron pump base & pump head models and "N" for AISI 316 construction.
The given performance is same for Type - C, S, N
Replace 'R' with 'L' and 'P' for Oval flange and PJE flange respectively.
The final digit of Model Identification '1' denotes 1 phase. Replace with '3' and '6' for 3 phase DOL motor and 3 phase SD motor respectively.
In view of the continuous developments the Information / Descriptions / Specifications / Illustrations are subject to change without notice.

Performance Curve & Table

Nominal Flow	40 gpm
Model	KH 40
Pipe Size	DN 1½" X 1¼"

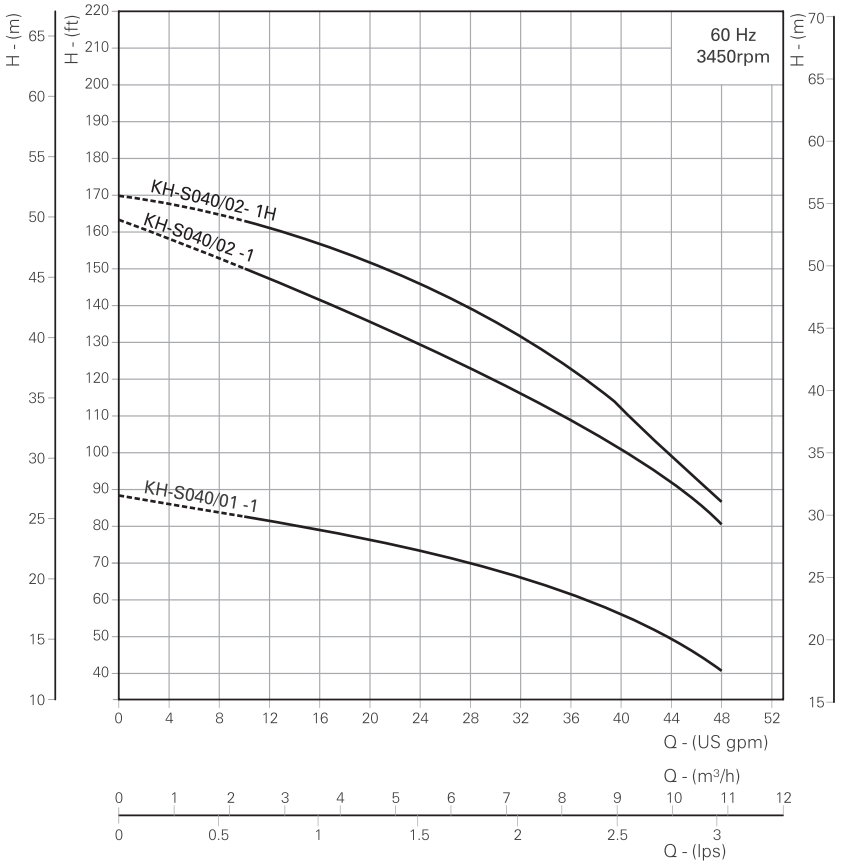

PUMP MODEL	MOTOR POWER - P2		DISCHARGE						
			gpm	0	12	24	32	40	48
	kW	HP	m³/h	0	2.7	5.5	7.3	9.1	10.9
KH-S040/01 -1	0.75	1.0	TOTAL MANOMETRIC HEAD IN FEET	89	81	73.5	66	56	40
KH-S040/02 -1	1.1	1.5		164	147	130	116	101	80
KH-S040/02- 1H	1.5	2.0		171	161	146	132	112	87

Replace the 3rd digit in model name as "C" for Cast Iron pump base & pump head models and "N" for AISI 316 construction.
The given performance is same for Type - C, S, N
Replace 'R' with 'L' and 'P' for Oval flange and PJE flange respectively.
The final digit of Model Identification '1' denotes 1 phase. Replace with '3' and '6' for 3 phase DOL motor and 3 phase SD motor respectively.
In view of the continuous developments the Information / Descriptions / Specifications / Illustrations are subject to change without notice.

Performance Curve & Table

Nominal Flow	60 gpm
Model	KH 60
Pipe Size	DN 1½" X 1½"

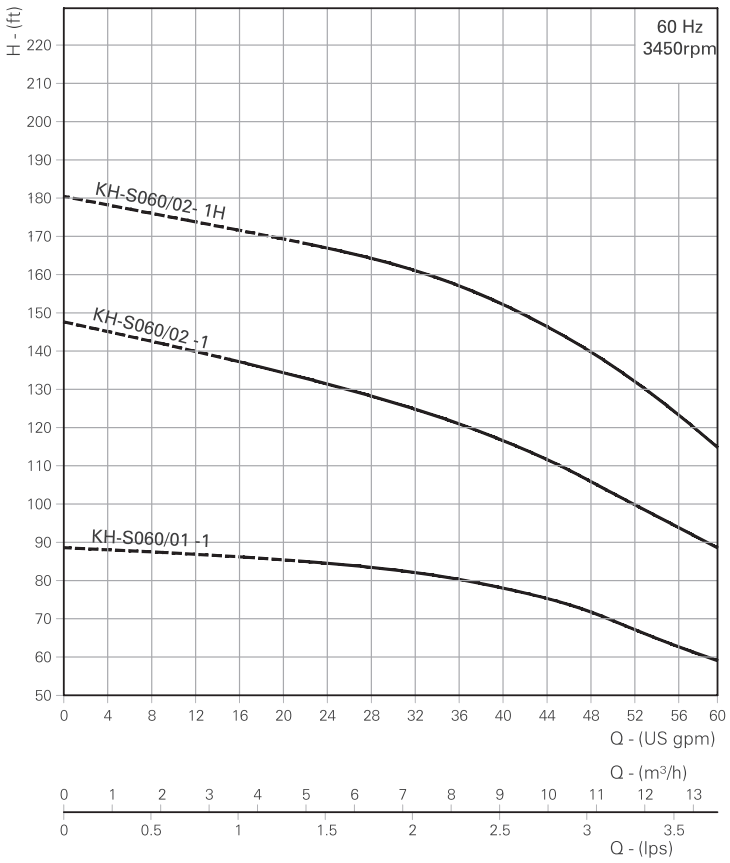

PUMP MODEL	MOTOR POWER - P2		DISCHARGE						
			gpm	0	16	24	36	48	60
	kW	HP	m³/h	0	3.6	5.5	8.2	10.9	13.6
KH-S060/01 -1	1.1	1.5	TOTAL MANOMETRIC HEAD IN FEET	89	86	84	80	72	58
KH-S060/02 -1	2.2	3.0		148	137	132	121	106	88
KH-S060/02- 1H	3	4.0		181	171	167	157	140	115

Replace the 3rd digit in model name as "C" for Cast Iron pump base & pump head models and "N" for AISI 316 construction.
The given performance is same for Type - C, S, N
Replace 'R' with 'L' and 'P' for Oval flange and PJE flange respectively.
The final digit of Model Identification '1' denotes 1 phase. Replace with '3' and '6' for 3 phase DOL motor and 3 phase SD motor respectively.
In view of the continuous developments the Information / Descriptions / Specifications / Illustrations are subject to change without notice.

EXPLODED VIEW

KH 5 - 13 & 26 gpm

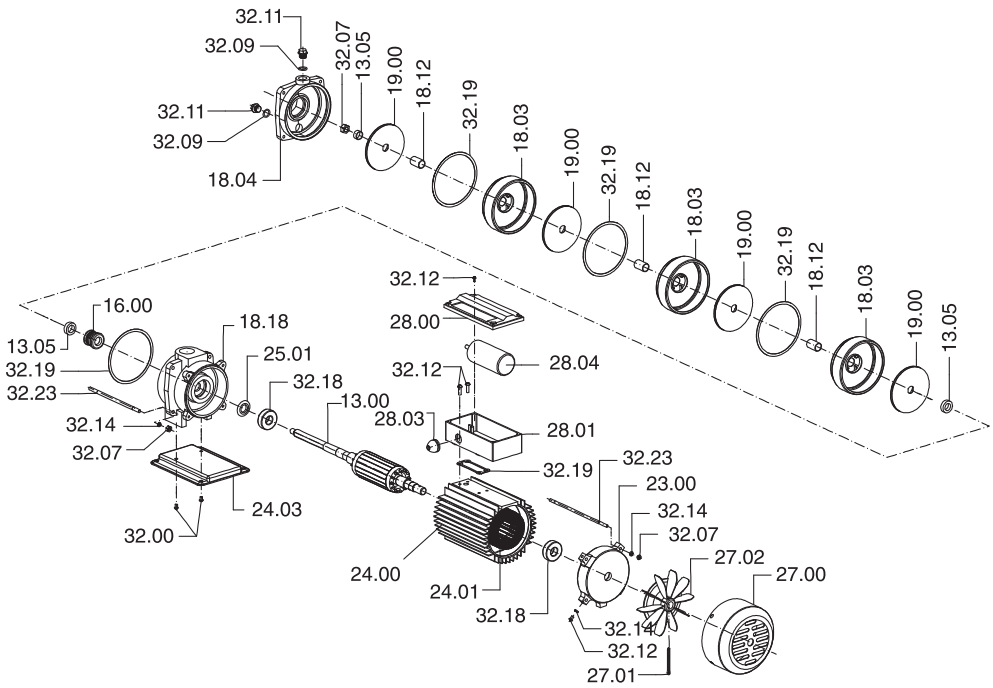

KH - 40 & 60 gpm

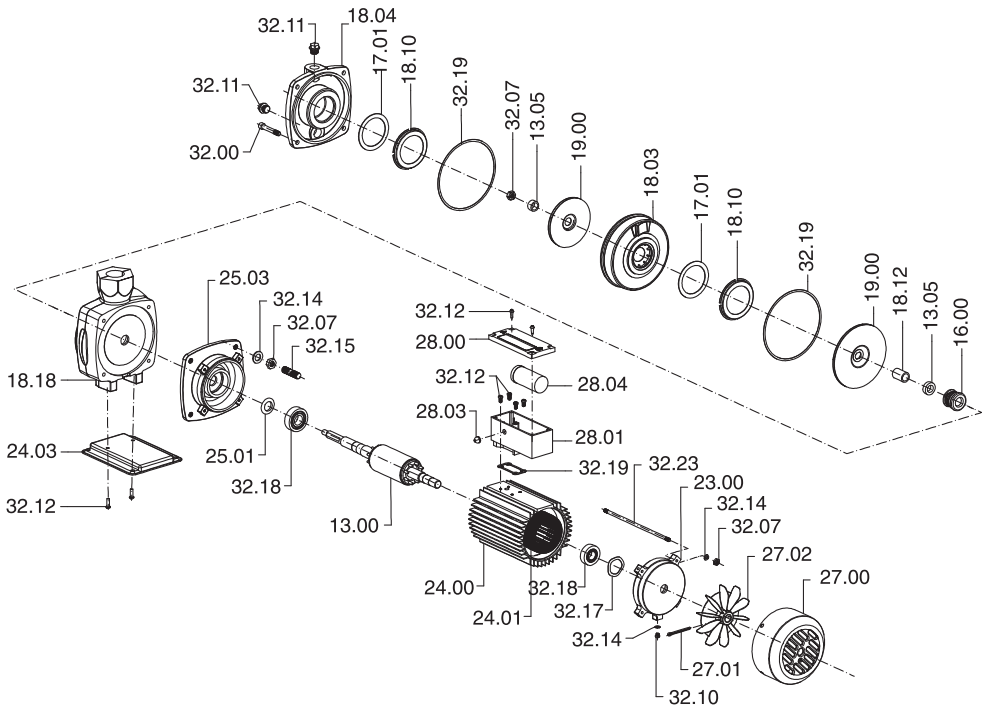

Part Name	Part No.
Rotor	13.00
Sleeve	13.05
Mechanical Seal	16.00
Wearing Ring	17.01
Chamber	18.03
Casing cover	18.04
Wearing Ring Retainer	18.10
Spacer	18.12
Chamber-Delivery	18.18
Impeller	19.00
Rear Cover	23.00
Motor Frame	24.00
Wound Stator	24.01
Base Plate	24.03
Deflector	25.01
Bracket	25.03
Cooling Fan Cover	27.00
Cooling Fan	27.02
Terminal Box Top	28.00
Terminal Box Bottom	28.01
Wiring Gland	28.03
Capacitor	28.04
Bolt	32.00
Nut	32.07
"O" Ring	32.09
Cooling Fan Split Pin	32.10
Drain Plug	32.11
Screw	32.12
Spring Washer	32.14
Stud	32.15
Wave Washer	32.17
Bearing	32.18
Gasket	32.19
Tie Rod	32.23

KH - 13 & 26

Dimensional & Weight Details

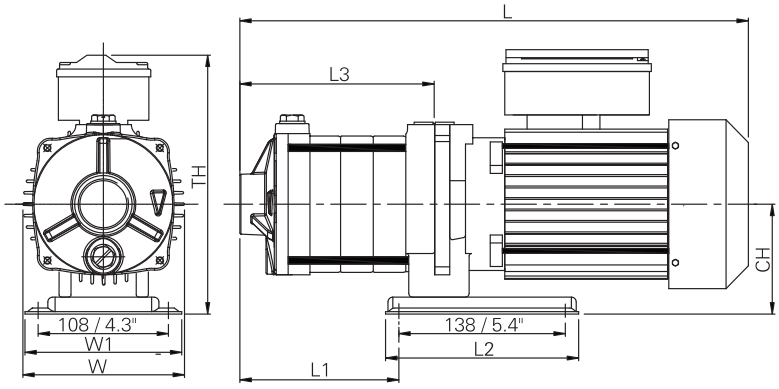

* All Dimensions are in mm & Inches.

Model	L				L1		L2		L3		W		W1		TH		CH		Approx. Weight	
	1Ph		3Ph																	
	mm	Inch	mm	Inch	mm	Inch	mm	Inch	mm	Inch	mm	Inch	mm	Inch	mm	Inch	mm	Inch	kg	lb
KH-S013/02 -1	335	13.2	325	12.8	70	2.8	160	6.3	99	3.9	134	5.3	130	5.1	215	8.5	90	3.5	13	29
KH-S013/03 -1	363	14.3	343	13.5	89	3.5	160	6.3	118	4.6	134	5.3	130	5.1	215	8.5	90	3.5	14	31
KH-S013/04 -1	362	14.3	362	14.3	108	4.3	160	6.3	137	5.4	134	5.3	130	5.1	215	8.5	90	3.5	15	33
KH-S013/05 -1	415	16.3	400	15.7	127	5.0	160	6.3	156	6.1	134	5.3	130	5.1	215	8.5	90	3.5	16	35
KH-S013/06 -1	409	16.1	419	16.5	146	5.7	160	6.3	175	6.9	134	5.3	130	5.1	215	8.5	90	3.5	17	37

Model	L				L1		L2		L3		W		W1		TH		CH		Approx. Weight	
	1Ph		3Ph																	
	mm	Inch	mm	Inch	mm	Inch	mm	Inch	mm	Inch	mm	Inch	mm	Inch	mm	Inch	mm	Inch	kg	lb
KH-S026/02 -1	354	13.9	333	13.1	79	3.1	160	6.3	108	4.3	134	5.3	130	5.1	215	8.5	90	3.5	13	29
KH-S026/03 -1	396	15.6	401	15.8	107	4.2	160	6.3	135	5.3	134	5.3	130	5.1	215	8.5	90	3.5	15	33
KH-S026/04 -1	444	17.5	424	16.7	135	5.3	160	6.3	162	6.4	134	5.3	130	5.1	215	8.5	90	3.5	16	35

Replace the 3rd digit in model name as "C" for Cast Iron pump base & pump head models and "N" for AISI 316 construction.
The given performance is same for Type - C, S, N
Replace 'R' with 'L' and 'P' for Oval flange and PJE flange respectively.
The final digit of Model Identification '1' denotes 1 phase. Replace with '3' and '6' for 3 phase DOL motor and 3 phase SD motor respectively.
In view of the continuous developments the Information / Descriptions / Specifications / Illustrations are subject to change without notice.

KH - 40 & 60

Dimensional & Weight Details

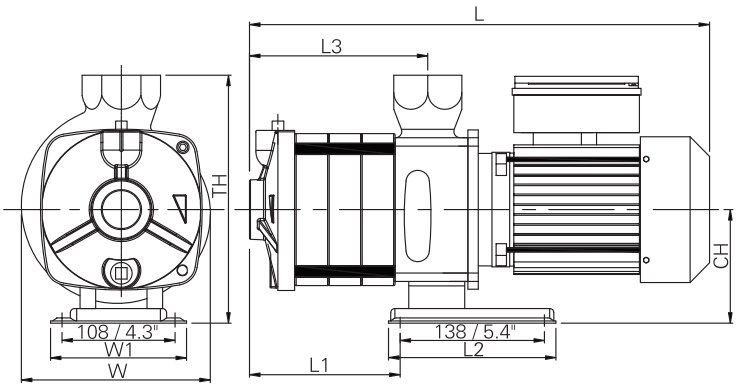

* All Dimensions are in mm & Inches.

Model	L				L1		L2		L3		W		W1		TH		CH		Approx. Weight	
	1Ph		3Ph																	
	mm	Inch	mm	Inch	mm	Inch	mm	Inch	mm	Inch	mm	Inch	mm	Inch	mm	Inch	mm	Inch	kg	lb
KH-S040/01 -1	369	14.5	349	13.7	52	2.0	160	6.3	72	2.8	181	7.1	130	5.1	238	9.8	109	4.3	17	37
KH-S040/02 -1	409	16.1	424	16.7	82	3.2	160	6.3	102.5	4.0	181	7.1	130	5.1	238	9.8	109	4.3	21	46
KH-S040/02 -1H	409	16.1	409	16.1	82	3.2	160	6.3	102.5	4.0	181	7.1	130	5.1	238	9.8	109	4.3	21.5	47

Model	L				L1		L2		L3		W		W1		TH		CH		Approx. Weight	
	1Ph		3Ph																	
	mm	Inch	mm	Inch	mm	Inch	mm	Inch	mm	Inch	mm	Inch	mm	Inch	mm	Inch	mm	Inch	kg	lb
KH-S060/01 -1	379	14.9	394	15.5	52	2.0	160	6.3	72	2.8	181	7.1	130	5.1	238	9.4	109	4.3	19	42
KH-S060/02 -1	424	16.7	424	16.7	82	3.2	160	6.3	102.5	4.0	181	7.1	130	5.1	238	9.4	109	4.3	21.5	47
KH-S060/02 -1H	465	18.3	465	18.3	82	3.2	160	6.3	102.5	4.0	181	7.1	130	5.1	238	9.4	109	4.3	30	66

Replace the 3rd digit in model name as "C" for Cast Iron pump base & pump head models and "N" for AISI 316 construction.
The given performance is same for Type - C, S, N
Replace 'R' with 'L' and 'P' for Oval flange and PJE flange respectively.
The final digit of Model Identification '1' denotes 1 phase. Replace with '3' and '6' for 3 phase DOL motor and 3 phase SD motor respectively.
In view of the continuous developments the Information / Descriptions / Specifications / Illustrations are subject to change without notice.

NOTES

NOTES

YOU ARE LOOKING AT WHAT THE FUTURE IS COMING TO!

Genvik presents a stable of products for a new generation of customers and applications

GENVIK
WE MAKE IT BETTER

ACNAL INDUSTRIES PRIVATE LIMITED
No.66/2, Athipalayam Road, Chinnavedampatti, Coimbatore - 641049.
Ph : +91 84894 22000. Email : sales@genvikpumps.com Website : www.genvikpumps.com

KE - 18CMP/G6